Signify

CityCharm fluid

BDS492



CityCharm: combining visual comfort and performance

The CityCharm range is designed for use in urban areas where comfortable lighting, ambience, and design play an important role. It offers three iconic, timeless designs: CityCharm cordoba (BDS490), CityCharm cone (BDS491), and CityCharm fluid (BDS492) along with a range of decorative and practical accessories. This enables you to create a lighting solution that carries the signature of your municipality, both by day and by night. Whether you specify cordoba, cone or fluid LED lights, CityCharm provides high visual comfort while maintaining excellent performance. It offers a choice of two innovative Lighting technologies: GentleBeam, which maximizes visual comfort, or ClearGuide (cordoba or cone), which optimizes vertical illumination and visual guidance. To personalize your CityCharm lighting solution further, decorative accessories for this range make it possible to define the volume of the bowl and change its appearance. A variety of dedicated brackets and masts are also available to

enable you to reshape your residential areas and city centers in the most elegant way imaginable.

Benefits

- Elegant, iconic range enhanced by dedicated poles and brackets to create distinctive styles
- Comfortable lighting with GentleBeam or ClearGuide technologies
- Preserves natural darkness and protects night-time environments
- Excellent lighting performance, high-quality finishing
- Future-ready with Zhaga-D4i system ready (SR) top socket to connect with Interact controls
- Service tag for easy installation and maintenance

Features

- Choice of luminaire shapes, color effects, poles and brackets
- Diffusing tools for visual comfort, colored inserts to enhance ambiance
- Wide range of lumen outputs and optics for maximum efficiency at all lighting levels
- Efficacy up to 144 lm/W
- Protecting dark skies with warm, DarkSky-approved CCTs (2200K, 2700K, 3000K)

Applications

- Residential
- Footpaths and cycle lanes
- Parks and boulevards

Versions



CityCharm fluid BDS492



CityCharm fluid BDS492 with SRT and GRB on post-top bracket

Dimensional drawing

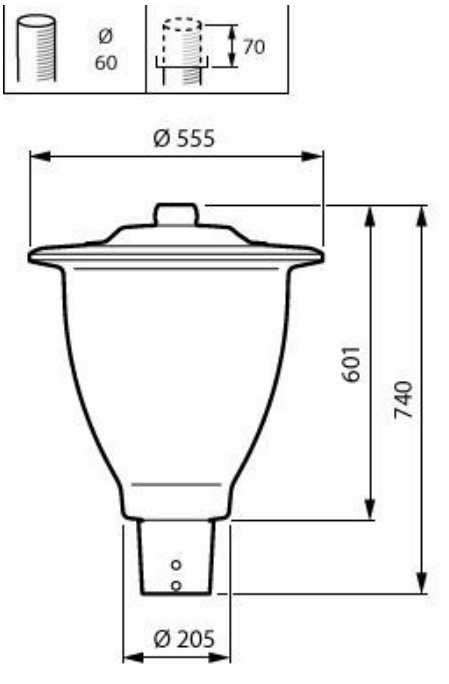

CityCharm fluid - LED module 5000 lm - LED - 730 warm white - Power supply unit with DALI and SystemReady interface - 220 to 240 V - 50 to 60 Hz - Safety class II - Symmetrical - Polycarbonate bowl/cover - Gray - Surge protection level until high voltage v in kV -differential mode + electro static discharge protection kV - Cable 6.0 m without plug - Spigot for diameter 60 mm

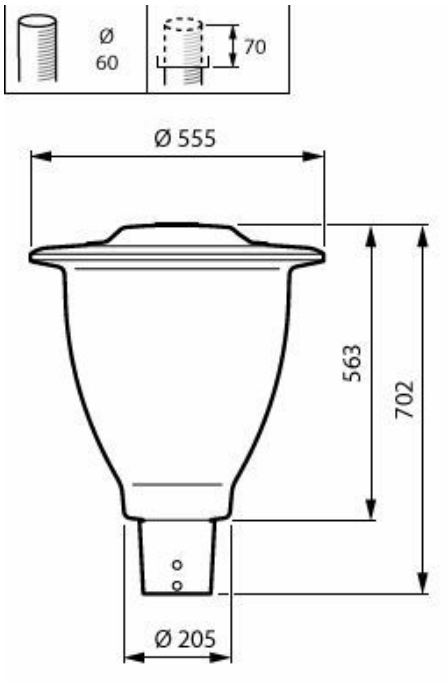

CityCharm fluid - LED Module 2000 lm - LED - 730 warm white - Power supply unit - 220 to 240 V - 50 to 60 Hz - Safety class I - Distribution medium - Polycarbonate bowl/cover - Gray - Philips standard surge protection level - Cable 0.5 m with cable connector - Spigot for diameter 60 mm

Product details



CityCharm Fluid



CityCharm Fluid with top socket

General Information

Light source replaceable	Yes
Number of gear units	1 unit
Driver included	Yes
Service tag	Yes

Light Technical

Correlated Color Temperature (Nom)	3000 K
Color rendering index (CRI)	70
Light source color	730 warm white
Luminaire light beam spread	360°

Controls and Dimming

Maximum dim level	Not applicable

Mechanical and Housing

Housing Color	Gray
Ingress protection code	IP66 [Dust penetration-protected, jet-proof]
Mech. impact protection code	IK11 [50 J vandal-resistant]
Standard tilt angle posttop	0°
Standard tilt angle side entry	0°
Optical cover type	Polycarbonate bowl/cover

Approval and Application

Flammability mark	-
CE mark	Yes

Product Data

Product family code	BDS492 [CITYCHARM FLUID]

General Information

Order Code	Full Product Name	Lamp family code
912300060273	BDS492 LED20/730 PSU I DM GRB GR N 60	LED20
912300060041	BDS492 HSR LED50/730 II S1F-PCN GR 60 C6	LED50
912300060042	BDS492 LED70/730 II DM-PCN GRB GR 60 C6	LED70
912300060043	BDS492 LED30/730 II A-PCN GRB GR 60	LED30

Light Technical

Order Code	Full Product Name	Upward light output ratio	Luminous Flux	Optic type outdoor
912300060273	BDS492 LED20/730 PSU I DM GRB GR N 60	0.016	1,680 lm	Distribution medium
912300060041	BDS492 HSR LED50/730 II S1F-PCN GR 60 C6	0.0082	4,150 lm	Symmetric distribution optic conform French PCN (Protection Ciel Nocturne - Dark sky)
912300060042	BDS492 LED70/730 II DM-PCN GRB GR 60 C6	0.0042	5,390 lm	Distribution medium PCN (protection Ciel Nocturne - Dark Sky) France
912300060043	BDS492 LED30/730 II A-PCN GRB GR 60	0.003	2,400 lm	Distribution asymmetric PCN (protection Ciel Nocturne - Dark Sky) France

Operating and Electrical

Order Code	Full Product Name	Power Consumption	Surge Protection (Common/Differential)
912300060273	BDS492 LED20/730 PSU I DM GRB GR N 60	14.2 W	Standard surge protection level
912300060041	BDS492 HSR LED50/730 II S1F-PCN GR 60 C6	33.5 W	Surge protection level until high voltage v in kV - differential mode + electro static discharge protection kV
912300060042	BDS492 LED70/730 II DM-PCN GRB GR 60 C6	43.5 W	Surge protection level until high voltage v in kV - differential mode + electro static discharge protection kV
912300060043	BDS492 LED30/730 II A-PCN GRB GR 60	19.8 W	Standard surge protection + electro static discharge protection kV

Controls and Dimming

Order Code	Full Product Name	Dimmable
912300060273	BDS492 LED20/730 PSU I DM GRB GR N 60	No
912300060041	BDS492 HSR LED50/730 II S1F-PCN GR 60 C6	Yes
912300060042	BDS492 LED70/730 II DM-PCN GRB GR 60 C6	Yes
912300060043	BDS492 LED30/730 II A-PCN GRB GR 60	Yes

Polar normal diagrams

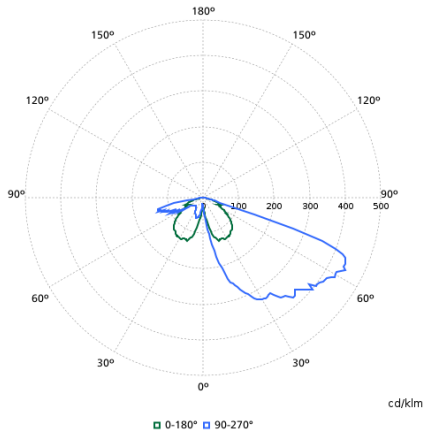

BDS492 LED30/730 II A-PCN GRB GR 60 912300060043

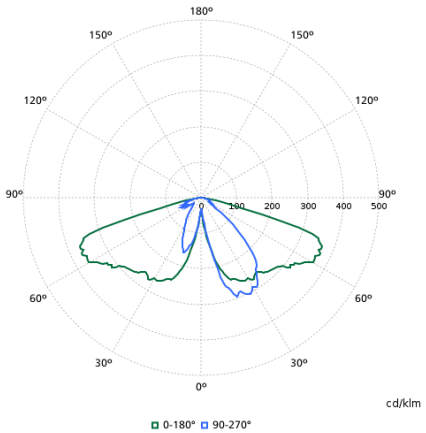

BDS492 LED70/730 II DM-PCN GRB GR 60 C6 912300060042

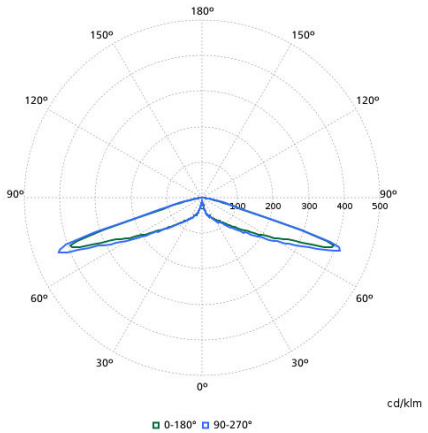

BDS492 HSR LED50/730 II S1F-PCN GR 60 C6 912300060041

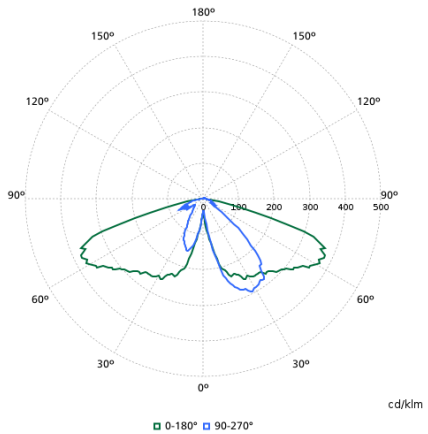

BDS492 LED20/730 PSU I DM GRB GR N 60 912300060273

© 2026 Signify Holding. All rights reserved. The information provided herein is subject to change, without notice. Signify does not give any representation or warranty as to the accuracy or completeness of the information included herein and shall not be liable for any action in reliance thereon. The information presented in this document is not intended as any commercial offer and does not form part of any quotation or contract, unless otherwise agreed by Signify. All trademarks are owned by Signify Holding or their respective owners.