PHILIPS

RoadFlair Pro

BRP59



Streamlined lights for brighter streets

Municipalities value energy saving more than ever, as energy price hikes put increasing pressure on the budgets. Street lighting consumes substantial energy, so large-scale upgrades to energy-efficient LED streetlights are fundamental to cities' cost-saving efforts. RoadFlair Pro has been upgraded to minimize costs while maximizing efficacy, safety, and functionality. And the best part - RoadFlair Pro offers a streamlined design, so it maintains an attractive aesthetic on city streets. These streetlights not only look good, they also offer excellent performance Future-proof technology combines with high efficacy (160 lm/W and 200 lm/W), innovative design, and smart connectivity in a light that makes your street look brighter and better

Benefits

- High efficacy
- Appealing and sustainable design
- Connected and system-ready
- Higher durability and reliability
- World-class photometric design
- Equipped with a Service tag, a QR-based identification system that makes each luminaire uniquely identifiable and provides maintenance, installation, and spare part information

Applications

- Motorways, inter-urban main roads, boulevards and avenues, roundabouts, pedestrian crossings
- Residential streets, side streets, squares, parks, cycle and pedestrian paths, playgrounds
- Parking areas, industrial areas, petrol stations, rail yards, airports, harbors, waterways

Features

- 170+ lm/W system efficacy (up to 300W)
- 200 lm/W system efficacy (up to 100W)
- Long service lifetime 100Khrs L80@Ta 35°C

- With 10kV or 15kV Surge protection Device
- Ready to be paired with lighting management systems and sensors

Versions



RoadFlair Pro



RoadFlair Pro



RoadFlair Pro

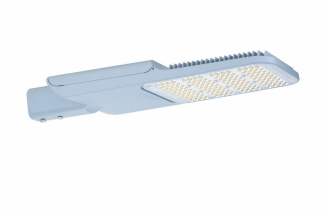

RoadFlair Pro



RoadFlair Pro



RoadFlair Pro



RoadFlair Pro



RoadFlair Pro



RoadFlair Pro



RoadFlair Pro



RoadFlair Pro



RoadFlair Pro



RoadFlair Pro



RoadFlair Pro



RoadFlair Pro



RoadFlair Pro



RoadFlair Pro



RoadFlair Pro



RoadFlair Pro



RoadFlair Pro



RoadFlair Pro



RoadFlair Pro



Data subject to change

Dimensional drawing

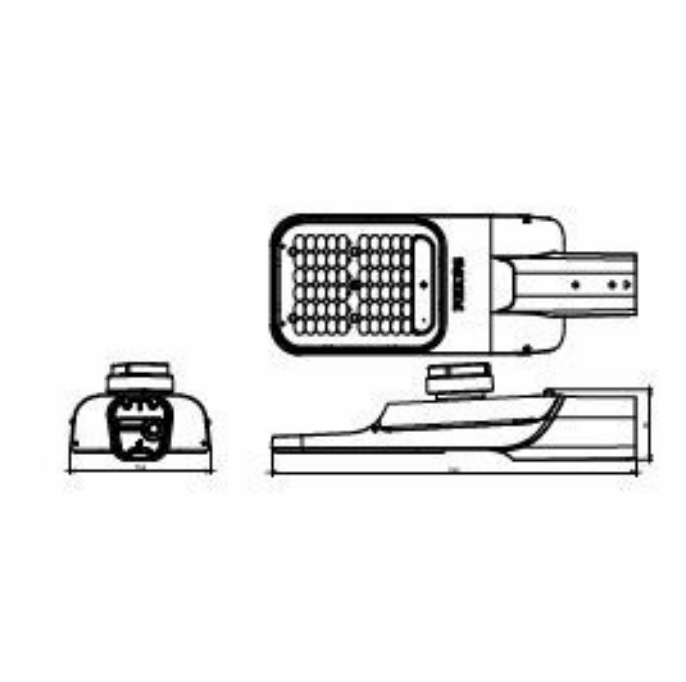

BRP592 LED192/NW 120W DM PSA P7 PE GM

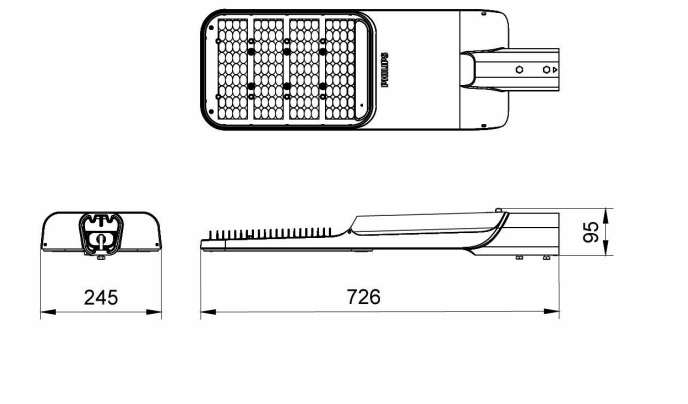

BRP595 LED479/NW 300W DM GL PE GM

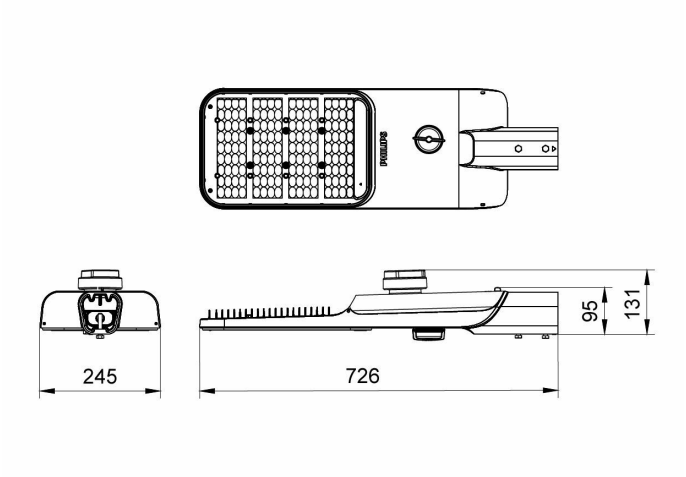

RoadFlair Pro - 48900 lm - 300 W - 4000 K

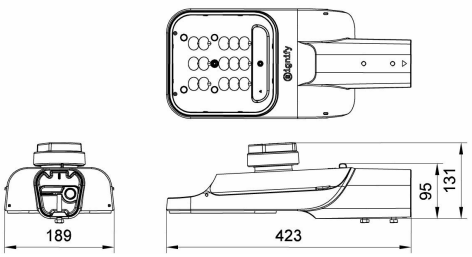

BRP591 LED23/NW 15W DWP II PSD P7L8ANZ

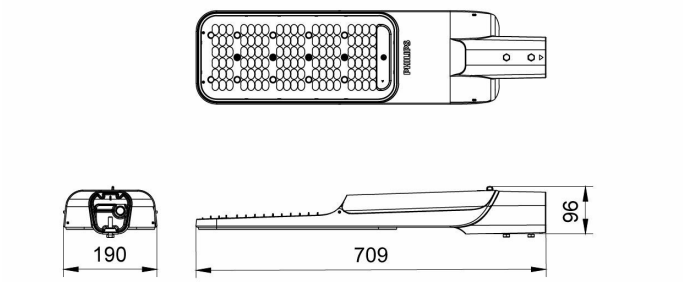

RoadFlair Pro - 39200 lm - 240 W - 4000 K

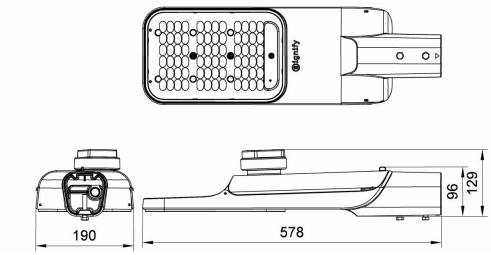

BRP593 LED223/NW 138W DWV II PSDP7L15ANZ

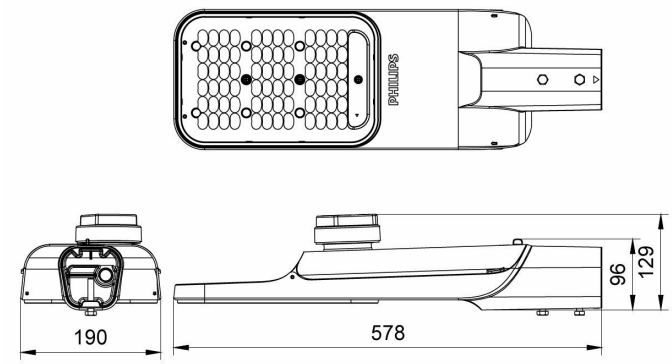

BRP593 LED242/NW 150W DM PSA P7 GM

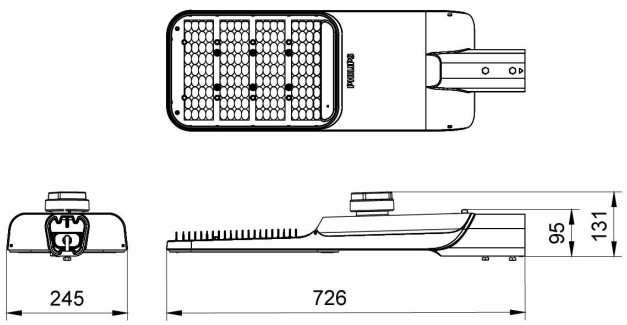

RoadFlair Pro - 48500 lm - 300 W - 4000 K

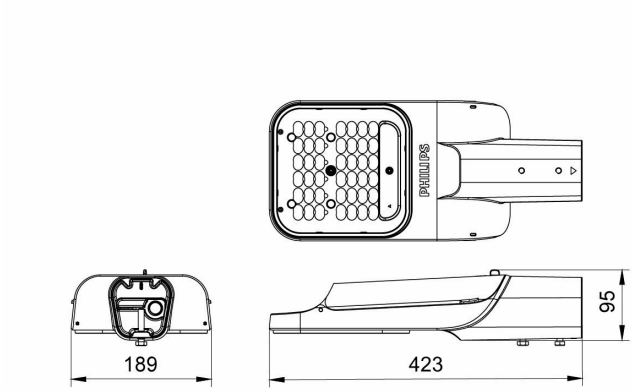

BRP591 LED143/NW 90W DM PSRD PE GM

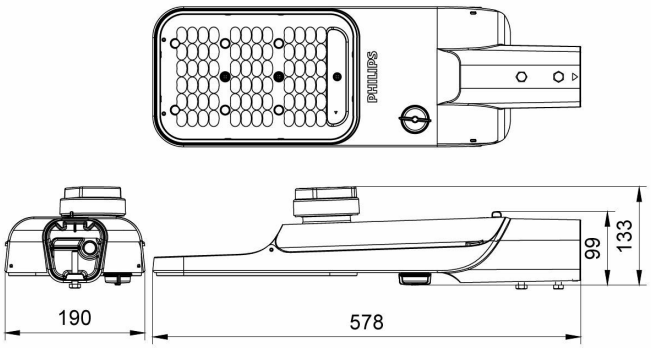

BRP593 LED240/NW 150W DM SR 7TSB PE GM

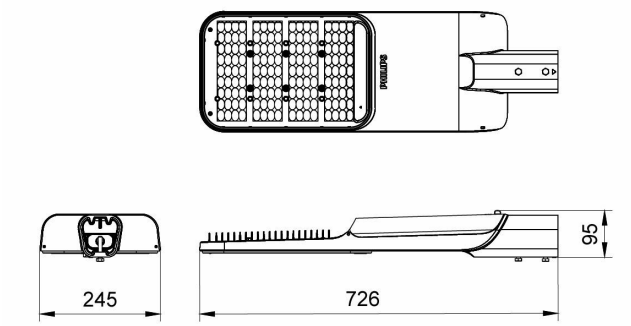

RoadFlair Pro - 40300 lm - 250 W - 4000 K

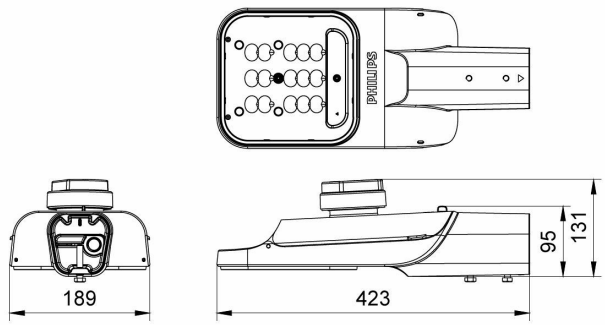

BRP591 LED142/NW 90W DM PSA P7 PE GM

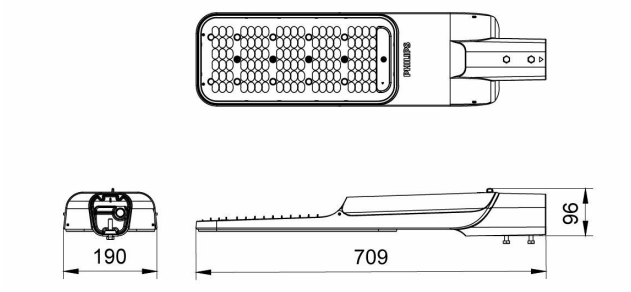

RoadFlair Pro - 32900 lm - 200 W - 4000 K

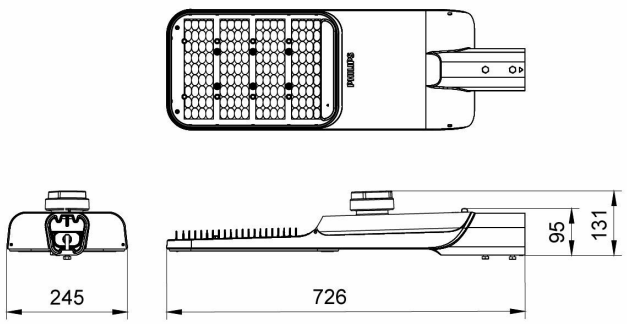

BRP595 LED479/NW 300W DM PSA P7 PE GM

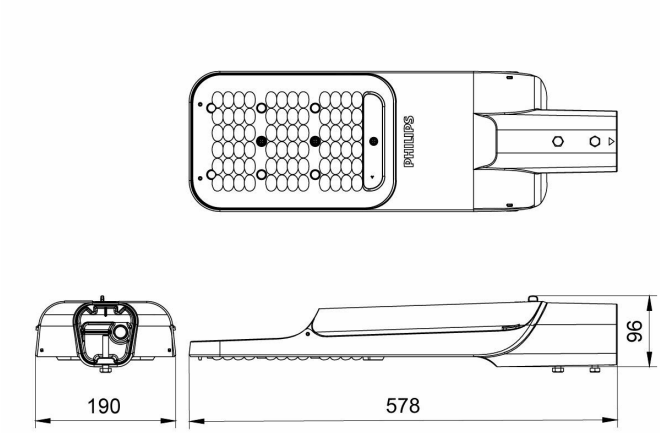

BRP593 LED245/NW 150W DM PSR GM

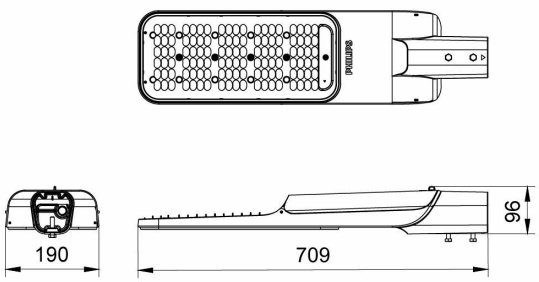

BRP594 LED358/NW 220W DM GL PE GM

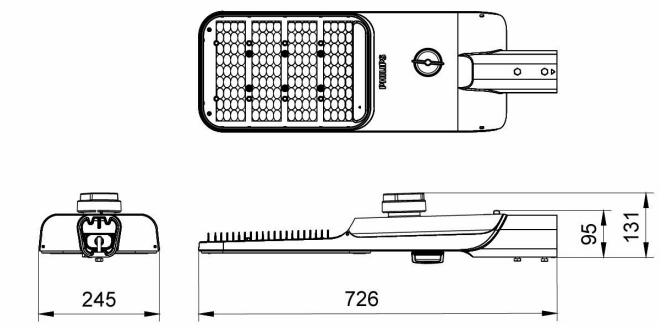

BRP595 LED479/NW 300W DM SR 7TSB PE GM

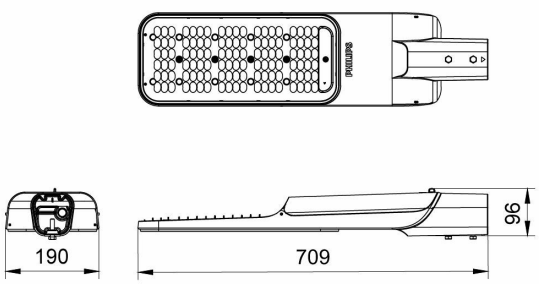

BRP594 LED389/NW 240W DM PSA P7 PE GM

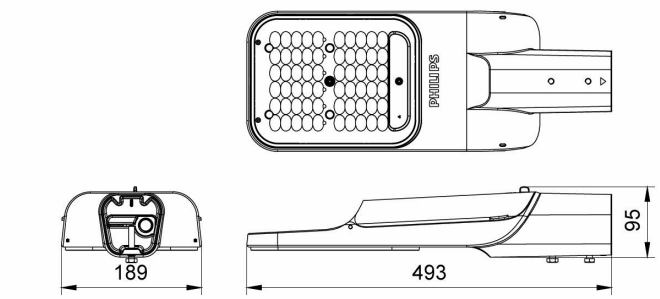

BRP592 LED194/NW 120W DM PSRD PE GM

General Information

Driver included	Yes
Service tag	Yes

Light Technical

Correlated Color Temperature (Nom)	4000 K
Light source color	740 neutral white

Mechanical and Housing

Ingress protection code	IP66 [Dust penetration-protected, jet-proof]
Mech. impact protection code	IK08 [5 J vandal-protected]
Optical cover type	Clear dome

Approval and Application

Flammability mark	-

Light Technical

Order Code	Full Product Name	Luminous Flux	Color rendering index (CRI)
911401652208	BRP591 LED116/NW 70W DM PSA GM	11,600 lm	>70
911401652608	BRP591 LED130/NW 80W DM PSA GM	13,000 lm	>70
911401654008	BRP591 LED143/NW 90W DM PSR GM	14,300 lm	>70
911401658208	BRP593 LED242/NW 150W DM PSA P7 GM	24,200 lm	>70
911401656708	BRP591 LED23/NW 15W DWP II PSD P7L8ANZ	2,300 lm	>70
911401661408	BRP595 LED403/NW 250W DM PSA GM	40,300 lm	>70
911401664008	BRP595 LED489/NW 300W DM PSR GM	48,900 lm	>70
911401671508	BRP595 LED130/NW 65W DW2 PSRD O5	13,000 lm	>70
911401672008	BRP595 LED195/NW 100W DW2 PSRD O5	19,500 lm	>70
911401663808	BRP595 LED485/NW 300W DM PSA P7 GM	48,500 lm	>70
911401672509	BRP593 LED244/NW 150W DM PSRD PE GM	24,400 lm	>70
911401673409	BRP593 LED240/NW 150W DM PSD PE GM	24,000 lm	>70
911401674009	BRP593 LED240/NW 150W DM GL PE GM	24,000 lm	>70
911401673609	BRP595 LED479/NW 300W DM SR 7TSB PE GM	47,900 lm	>70
911401673209	BRP591 LED142/NW 90W DM PSA P7 PE GM	14,200 lm	>70
911401672909	BRP594 LED389/NW 240W DM PSA P7 PE GM	38,900 lm	>70
911401672709	BRP591 LED143/NW 90W DM PSRD PE GM	14,300 lm	>70
911401673509	BRP591 LED65/NW 40W DM PSD PE GM	6,500 lm	>70
911401674209	BRP591 LED139/NW 90W DM GL PE GM	13,900 lm	>70
911401674409	BRP591 LED143/NW 90W DM PSR PE GM	14,300 lm	>70
911401661708	BRP594 LED392/NW 240W DM PSA P7 GM	39,200 lm	>70

Order Code	Full Product Name	Luminous Flux	Color rendering index (CRI)
911401673109	BRP592 LED192/NW 120W DM PSA P7 PE GM	19,200 lm	>70
911401673009	BRP593 LED240/NW 150W DM PSA P7 PE GM	24,000 lm	>70
911401656208	BRP593 LED223/NW 138W DWV II PSDP7L15ANZ	22,300 lm	>70
911401659108	BRP593 LED61/NW 35W DWP3 II PSD P7L8ANZ	6,100 lm	>70
911401664108	BRP595 LED489/NW 300W DM SR P7T SRB GM	48,900 lm	>70
911401672809	BRP595 LED479/NW 300W DM PSA P7 PE GM	47,900 lm	>70
911401648909	BRP592 LED209/NW 120W DW2 PSA GC	20,900 lm	70
911401672609	BRP592 LED194/NW 120W DM PSRD PE GM	19,400 lm	>70
911401674109	BRP592 LED163/NW 100W DM GL PE GM	16,300 lm	>70
911401674309	BRP592 LED203/NW 130W DM PSR PE GM	20,300 lm	>70
911401672409	BRP594 LED389/NW 240W DM PSRD PE GM	38,900 lm	>70
911401673909	BRP594 LED358/NW 220W DM GL PE GM	35,800 lm	>70
911401649509	BRP595 LED525/NW 300W DW2 PSA GC	52,500 lm	70
911401672309	BRP595 LED487/NW 300W DM PSRD PE GM	48,700 lm	>70
911401673309	BRP595 LED479/NW 300W DM PSD PE GM	47,900 lm	>70
911401673809	BRP595 LED479/NW 300W DM GL PE GM	47,900 lm	>70
911401673709	BRP593 LED240/NW 150W DM SR 7TSB PE GM	24,000 lm	>70
911401659608	BRP594 LED301/NW 180W DM PSA GM	30,100 lm	>70
911401660008	BRP594 LED329/NW 200W DM PSA GM	32,900 lm	>70
911401660408	BRP594 LED356/NW 220W DM PSA GM	35,600 lm	>70
911401661108	BRP594 LED392/NW 240W DM PSA GM	39,200 lm	>70
911401658808	BRP593 LED244/NW 150W DM SR P7T SRB GM	24,400 lm	>70
911401654608	BRP592 LED167/NW 100W DM PSA GM	16,700 lm	>70
911401655308	BRP592 LED195/NW 120W DM PSA GM	19,500 lm	>70
911401655908	BRP592 LED203/NW 130W DM PSR GM	20,300 lm	>70
911401656608	BRP593 LED229/NW 140W DM PSA GM	22,900 lm	>70
911401658908	BRP593 LED245/NW 150W DM PSR GM	24,500 lm	>70

Operating and Electrical

Order Code	Full Product Name	Power Consumption
911401652208	BRP591 LED116/NW 70W DM PSA GM	70 W
911401652608	BRP591 LED130/NW 80W DM PSA GM	80 W
911401654008	BRP591 LED143/NW 90W DM PSR GM	90 W
911401658208	BRP593 LED242/NW 150W DM PSA P7 GM	150 W
911401656708	BRP591 LED23/NW 15W DWP II PSD P7L8ANZ	13 W
911401661408	BRP595 LED403/NW 250W DM PSA GM	250 W
911401664008	BRP595 LED489/NW 300W DM PSR GM	300 W
911401671508	BRP595 LED130/NW 65W DW2 PSRD O5	65 W
911401672008	BRP595 LED195/NW 100W DW2 PSRD O5	100 W
911401663808	BRP595 LED485/NW 300W DM PSA P7 GM	300 W
911401672509	BRP593 LED244/NW 150W DM PSRD PE GM	150 W

Order Code	Full Product Name	Power Consumption
911401673409	BRP593 LED240/NW 150W DM PSD PE GM	150 W
911401674009	BRP593 LED240/NW 150W DM GL PE GM	150 W
911401673609	BRP595 LED479/NW 300W DM SR 7TSB PE GM	300 W
911401673209	BRP591 LED142/NW 90W DM PSA P7 PE GM	90 W
911401672909	BRP594 LED389/NW 240W DM PSA P7 PE GM	240 W
911401672709	BRP591 LED143/NW 90W DM PSRD PE GM	90 W
911401673509	BRP591 LED65/NW 40W DM PSD PE GM	40 W
911401674209	BRP591 LED139/NW 90W DM GL PE GM	90 W
911401674409	BRP591 LED143/NW 90W DM PSR PE GM	90 W
911401661708	BRP594 LED392/NW 240W DM PSA P7 GM	240 W
911401673109	BRP592 LED192/NW 120W DM PSA P7 PE GM	120 W
911401673009	BRP593 LED240/NW 150W DM PSA P7 PE GM	150 W
911401656208	BRP593 LED223/NW 138W DWV II PSDP7L15ANZ	134 W
911401659108	BRP593 LED61/NW 35W DWP3 II PSD P7L8ANZ	34 W
911401664108	BRP595 LED489/NW 300W DM SR P7T SRB GM	300 W
911401672809	BRP595 LED479/NW 300W DM PSA P7 PE GM	300 W
911401648909	BRP592 LED209/NW 120W DW2 PSA GC	120 W
911401672609	BRP592 LED194/NW 120W DM PSRD PE GM	120 W
911401674109	BRP592 LED163/NW 100W DM GL PE GM	100 W
911401674309	BRP592 LED203/NW 130W DM PSR PE GM	130 W
911401672409	BRP594 LED389/NW 240W DM PSRD PE GM	240 W
911401673909	BRP594 LED358/NW 220W DM GL PE GM	220 W
911401649509	BRP595 LED525/NW 300W DW2 PSA GC	300 W
911401672309	BRP595 LED487/NW 300W DM PSRD PE GM	300 W
911401673309	BRP595 LED479/NW 300W DM PSD PE GM	300 W
911401673809	BRP595 LED479/NW 300W DM GL PE GM	300 W
911401673709	BRP593 LED240/NW 150W DM SR 7TSB PE GM	150 W
911401659608	BRP594 LED301/NW 180W DM PSA GM	180 W
911401660008	BRP594 LED329/NW 200W DM PSA GM	200 W
911401660408	BRP594 LED356/NW 220W DM PSA GM	220 W
911401661108	BRP594 LED392/NW 240W DM PSA GM	240 W
911401658808	BRP593 LED244/NW 150W DM SR P7T SRB GM	150 W
911401654608	BRP592 LED167/NW 100W DM PSA GM	100 W
911401655308	BRP592 LED195/NW 120W DM PSA GM	120 W
911401655908	BRP592 LED203/NW 130W DM PSR GM	130 W
911401656608	BRP593 LED229/NW 140W DM PSA GM	140 W
911401658908	BRP593 LED245/NW 150W DM PSR GM	150 W

Controls and Dimming

Order Code	Full Product Name	Dimmable
911401652208	BRP591 LED116/NW 70W DM PSA GM	Yes

Order Code	Full Product Name	Dimmable
911401652608	BRP591 LED130/NW 80W DM PSA GM	Yes
911401654008	BRP591 LED143/NW 90W DM PSR GM	Yes
911401658208	BRP593 LED242/NW 150W DM PSA P7 GM	Yes
911401656708	BRP591 LED23/NW 15W DWP II PSD P7L8ANZ	Yes
911401661408	BRP595 LED403/NW 250W DM PSA GM	Yes
911401664008	BRP595 LED489/NW 300W DM PSR GM	Yes
911401671508	BRP595 LED130/NW 65W DW2 PSRD O5	Yes
911401672008	BRP595 LED195/NW 100W DW2 PSRD O5	Yes
911401663808	BRP595 LED485/NW 300W DM PSA P7 GM	Yes
911401672509	BRP593 LED244/NW 150W DM PSRD PE GM	Yes
911401673409	BRP593 LED240/NW 150W DM PSD PE GM	Yes
911401674009	BRP593 LED240/NW 150W DM GL PE GM	Yes
911401673609	BRP595 LED479/NW 300W DM SR 7TSB PE GM	Yes
911401673209	BRP591 LED142/NW 90W DM PSA P7 PE GM	Yes
911401672909	BRP594 LED389/NW 240W DM PSA P7 PE GM	Yes
911401672709	BRP591 LED143/NW 90W DM PSRD PE GM	Yes
911401673509	BRP591 LED65/NW 40W DM PSD PE GM	Yes
911401674209	BRP591 LED139/NW 90W DM GL PE GM	Yes
911401674409	BRP591 LED143/NW 90W DM PSR PE GM	Yes
911401661708	BRP594 LED392/NW 240W DM PSA P7 GM	Yes
911401673109	BRP592 LED192/NW 120W DM PSA P7 PE GM	Yes
911401673009	BRP593 LED240/NW 150W DM PSA P7 PE GM	Yes
911401656208	BRP593 LED223/NW 138W DWV II PSDP7L15ANZ	Yes
911401659108	BRP593 LED61/NW 35W DWP3 II PSD P7L8ANZ	Yes
911401664108	BRP595 LED489/NW 300W DM SR P7T SRB GM	Yes
911401672809	BRP595 LED479/NW 300W DM PSA P7 PE GM	Yes
911401648909	BRP592 LED209/NW 120W DW2 PSA GC	1-10V
911401672609	BRP592 LED194/NW 120W DM PSRD PE GM	Yes
911401674109	BRP592 LED163/NW 100W DM GL PE GM	Yes
911401674309	BRP592 LED203/NW 130W DM PSR PE GM	Yes
911401672409	BRP594 LED389/NW 240W DM PSRD PE GM	Yes
911401673909	BRP594 LED358/NW 220W DM GL PE GM	Yes
911401649509	BRP595 LED525/NW 300W DW2 PSA GC	1-10V
911401672309	BRP595 LED487/NW 300W DM PSRD PE GM	Yes
911401673309	BRP595 LED479/NW 300W DM PSD PE GM	Yes
911401673809	BRP595 LED479/NW 300W DM GL PE GM	Yes
911401673709	BRP593 LED240/NW 150W DM SR 7TSB PE GM	Yes
911401659608	BRP594 LED301/NW 180W DM PSA GM	Yes
911401660008	BRP594 LED329/NW 200W DM PSA GM	Yes
911401660408	BRP594 LED356/NW 220W DM PSA GM	Yes
911401661108	BRP594 LED392/NW 240W DM PSA GM	Yes
911401658808	BRP593 LED244/NW 150W DM SR P7T SRB GM	Yes

Order Code	Full Product Name	Dimmable
911401654608	BRP592 LED167/NW 100W DM PSA GM	Yes
911401655308	BRP592 LED195/NW 120W DM PSA GM	Yes
911401655908	BRP592 LED203/NW 130W DM PSR GM	Yes
911401656608	BRP593 LED229/NW 140W DM PSA GM	Yes
911401658908	BRP593 LED245/NW 150W DM PSR GM	Yes

Mechanical and Housing

Order Code	Full Product Name	Housing Color
911401652208	BRP591 LED116/NW 70W DM PSA GM	Grey
911401652608	BRP591 LED130/NW 80W DM PSA GM	Grey
911401654008	BRP591 LED143/NW 90W DM PSR GM	Grey
911401658208	BRP593 LED242/NW 150W DM PSA P7 GM	Grey
911401656708	BRP591 LED23/NW 15W DWP II PSD P7L8ANZ	Grey
911401661408	BRP595 LED403/NW 250W DM PSA GM	Grey
911401664008	BRP595 LED489/NW 300W DM PSR GM	Grey
911401671508	BRP595 LED130/NW 65W DW2 PSRD O5	Grey
911401672008	BRP595 LED195/NW 100W DW2 PSRD O5	Grey
911401663808	BRP595 LED485/NW 300W DM PSA P7 GM	Grey
911401672509	BRP593 LED244/NW 150W DM PSRD PE GM	Gray
911401673409	BRP593 LED240/NW 150W DM PSD PE GM	Gray
911401674009	BRP593 LED240/NW 150W DM GL PE GM	Gray
911401673609	BRP595 LED479/NW 300W DM SR 7TSB PE GM	Gray
911401673209	BRP591 LED142/NW 90W DM PSA P7 PE GM	Gray
911401672909	BRP594 LED389/NW 240W DM PSA P7 PE GM	Gray
911401672709	BRP591 LED143/NW 90W DM PSRD PE GM	Gray
911401673509	BRP591 LED65/NW 40W DM PSD PE GM	Gray
911401674209	BRP591 LED139/NW 90W DM GL PE GM	Gray
911401674409	BRP591 LED143/NW 90W DM PSR PE GM	Gray
911401661708	BRP594 LED392/NW 240W DM PSA P7 GM	Grey
911401673109	BRP592 LED192/NW 120W DM PSA P7 PE GM	Gray
911401673009	BRP593 LED240/NW 150W DM PSA P7 PE GM	Gray
911401656208	BRP593 LED223/NW 138W DWV II PSDP7L15ANZ	Grey
911401659108	BRP593 LED61/NW 35W DWP3 II PSD P7L8ANZ	Grey
911401664108	BRP595 LED489/NW 300W DM SR P7T SRB GM	Grey
911401672809	BRP595 LED479/NW 300W DM PSA P7 PE GM	Gray
911401648909	BRP592 LED209/NW 120W DW2 PSA GC	RAL7040
911401672609	BRP592 LED194/NW 120W DM PSRD PE GM	Gray
911401674109	BRP592 LED163/NW 100W DM GL PE GM	Gray
911401674309	BRP592 LED203/NW 130W DM PSR PE GM	Gray
911401672409	BRP594 LED389/NW 240W DM PSRD PE GM	Gray
911401673909	BRP594 LED358/NW 220W DM GL PE GM	Gray

Order Code	Full Product Name	Housing Color
911401649509	BRP595 LED525/NW 300W DW2 PSA GC	RAL7040
911401672309	BRP595 LED487/NW 300W DM PSRD PE GM	Gray
911401673309	BRP595 LED479/NW 300W DM PSD PE GM	Gray
911401673809	BRP595 LED479/NW 300W DM GL PE GM	Gray
911401673709	BRP593 LED240/NW 150W DM SR 7TSB PE GM	Gray
911401659608	BRP594 LED301/NW 180W DM PSA GM	Grey
911401660008	BRP594 LED329/NW 200W DM PSA GM	Grey
911401660408	BRP594 LED356/NW 220W DM PSA GM	Grey
911401661108	BRP594 LED392/NW 240W DM PSA GM	Grey
911401658808	BRP593 LED244/NW 150W DM SR P7T SRB GM	Grey
911401654608	BRP592 LED167/NW 100W DM PSA GM	Grey
911401655308	BRP592 LED195/NW 120W DM PSA GM	Grey
911401655908	BRP592 LED203/NW 130W DM PSR GM	Grey
911401656608	BRP593 LED229/NW 140W DM PSA GM	Grey
911401658908	BRP593 LED245/NW 150W DM PSR GM	Grey

Approval and Application

Order Code	Full Product Name	CE mark
911401652208	BRP591 LED116/NW 70W DM PSA GM	Yes
911401652608	BRP591 LED130/NW 80W DM PSA GM	Yes
911401654008	BRP591 LED143/NW 90W DM PSR GM	Yes
911401658208	BRP593 LED242/NW 150W DM PSA P7 GM	Yes
911401656708	BRP591 LED23/NW 15W DWP II PSD P7L8ANZ	Yes
911401661408	BRP595 LED403/NW 250W DM PSA GM	Yes
911401664008	BRP595 LED489/NW 300W DM PSR GM	Yes
911401671508	BRP595 LED130/NW 65W DW2 PSRD O5	Yes
911401672008	BRP595 LED195/NW 100W DW2 PSRD O5	Yes
911401663808	BRP595 LED485/NW 300W DM PSA P7 GM	Yes
911401672509	BRP593 LED244/NW 150W DM PSRD PE GM	Yes
911401673409	BRP593 LED240/NW 150W DM PSD PE GM	Yes
911401674009	BRP593 LED240/NW 150W DM GL PE GM	Yes
911401673609	BRP595 LED479/NW 300W DM SR 7TSB PE GM	Yes
911401673209	BRP591 LED142/NW 90W DM PSA P7 PE GM	Yes
911401672909	BRP594 LED389/NW 240W DM PSA P7 PE GM	Yes
911401672709	BRP591 LED143/NW 90W DM PSRD PE GM	Yes
911401673509	BRP591 LED65/NW 40W DM PSD PE GM	Yes
911401674209	BRP591 LED139/NW 90W DM GL PE GM	Yes
911401674409	BRP591 LED143/NW 90W DM PSR PE GM	Yes
911401661708	BRP594 LED392/NW 240W DM PSA P7 GM	Yes
911401673109	BRP592 LED192/NW 120W DM PSA P7 PE GM	Yes
911401673009	BRP593 LED240/NW 150W DM PSA P7 PE GM	Yes

Order Code	Full Product Name	CE mark
911401656208	BRP593 LED223/NW 138W DWV II PSDP7L15ANZ	Yes
911401659108	BRP593 LED61/NW 35W DWP3 II PSD P7L8ANZ	Yes
911401664108	BRP595 LED489/NW 300W DM SR P7T SRB GM	Yes
911401672809	BRP595 LED479/NW 300W DM PSA P7 PE GM	Yes
911401648909	BRP592 LED209/NW 120W DW2 PSA GC	No
911401672609	BRP592 LED194/NW 120W DM PSRD PE GM	Yes
911401674109	BRP592 LED163/NW 100W DM GL PE GM	Yes
911401674309	BRP592 LED203/NW 130W DM PSR PE GM	Yes
911401672409	BRP594 LED389/NW 240W DM PSRD PE GM	Yes
911401673909	BRP594 LED358/NW 220W DM GL PE GM	Yes
911401649509	BRP595 LED525/NW 300W DW2 PSA GC	No
911401672309	BRP595 LED487/NW 300W DM PSRD PE GM	Yes
911401673309	BRP595 LED479/NW 300W DM PSD PE GM	Yes
911401673809	BRP595 LED479/NW 300W DM GL PE GM	Yes
911401673709	BRP593 LED240/NW 150W DM SR 7TSB PE GM	Yes
911401659608	BRP594 LED301/NW 180W DM PSA GM	Yes
911401660008	BRP594 LED329/NW 200W DM PSA GM	Yes
911401660408	BRP594 LED356/NW 220W DM PSA GM	Yes
911401661108	BRP594 LED392/NW 240W DM PSA GM	Yes
911401658808	BRP593 LED244/NW 150W DM SR P7T SRB GM	Yes
911401654608	BRP592 LED167/NW 100W DM PSA GM	Yes
911401655308	BRP592 LED195/NW 120W DM PSA GM	Yes
911401655908	BRP592 LED203/NW 130W DM PSR GM	Yes
911401656608	BRP593 LED229/NW 140W DM PSA GM	Yes
911401658908	BRP593 LED245/NW 150W DM PSR GM	Yes

© 2026 Signify Holding. All rights reserved. The information provided herein is subject to change, without notice. Signify does not give any representation or warranty as to the accuracy or completeness of the information included herein and shall not be liable for any action in reliance thereon. The information presented in this document is not intended as any commercial offer and does not form part of any quotation or contract, unless otherwise agreed by Signify. Philips and the Philips Shield Emblem are registered trademarks of Koninklijke Philips N.V.