PHILIPS

RC740B LED25S/857 W60L60 PSD WH

919515813256



Light as Natural as Daylight

For the modern workspace lighting challenges that may inspire exciting new concepts or rejuvenate routine patterns, DaySpace offers a distinctive approach with the emphasis on the overall integrated look of the ceiling rather than on the luminaire itself. DaySpace discreetly integrates into the ceiling to deliver soft and ethereal yet brilliant environments. A luminous web or well-defined squares perched for a geometric yet whimsical space – DaySpace comes to your design rescue. For the Architects, Designers & Real Estate Professionals Designing/ Developing Next Gen Office Spaces DaySpace Provides. Creative Freedom to Blend in Lighting as an Architectural Element of the office. The opportunity to create the desired ambience through its customizable nature. To Declutter and break away from the Boring 2'x2' Lighting. Because of its unique design that minimizes the intrusion of the lighting surface into the office architecture and create a completely customized ambience

Warnings and Safety

- Meant for Indoor Application Only. Should not be used in outdoor environment.

General Information

Driver included	Yes
Light source engine type	LED
Warranty period	3 years

Light Technical

Luminous Flux	2,800 lm
Correlated Color Temperature (Nom)	5700 K

Luminous Efficacy (rated) (Nom)	90 lm/W
Color rendering index (CRI)	>80
Beam angle of light source	120 degree(s)
Light source color	857 daylight
Optic type	Beam angle 120°
Luminaire light beam spread	120°

Operating and Electrical

Input Voltage	120 to 277 V
Line Frequency	50 Hz
Power Consumption	30 W
Power Factor (Fraction)	0.9
Protection class IEC	Safety class I
Surge Protection (Common/ Differential)	Surge protection level until 2.5 kV

Controls and Dimming

Dimmable	Yes
Control interface	DALI

Mechanical and Housing

Housing Material	Steel
Optic material	Polycarbonate
Optical cover material	Polystyrene
Housing Color	White RAL9016
Mounting device	Recessed mounting box square
Material	Steel

Dimensional drawing

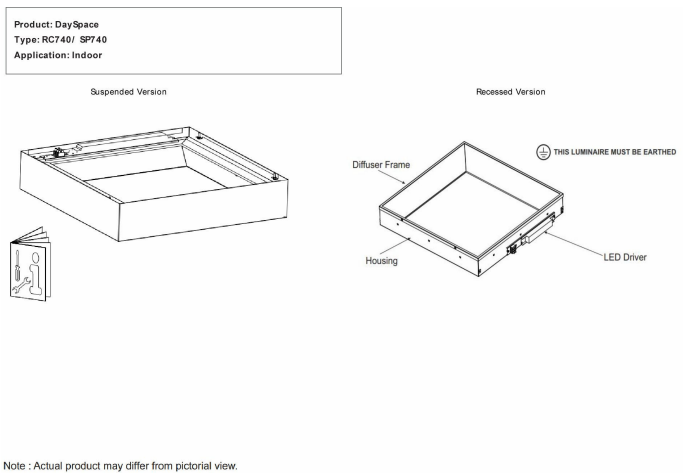

Note : Actual product may differ from pictorial view.

Ingress protection code	IP20 [Finger-protected]
Mech. impact protection code	IK02 [0.2 J standard]
Optical cover type	UV stabilized Polycarbonate cover
Net Weight (Piece)	3.500 kg

Approval and Application

Flammability mark	For mounting on normally flammable surfaces
Ambient temperature range	0 to +45 °C

Initial Performance (IEC Compliant)

Power consumption tolerance	+/-10%

Over Time Performance (IEC Compliant)

Median useful life L70B50	50,000 hour(s)

Product Data

Order product name	RC740B LED25S/857 W60L60 PSD WH
Full product name	RC740B LED25S/857 W60L60 PSD WH
Order code	919515813256
Material Nr. (12NC)	919515813256
Numerator - Quantity Per Pack	1
Numerator - Packs per outer box	2

Related Documents

Documents and certificates	Document Name	Download
Installation Instructions	dayspace_ troffer_rc740-ini.pdf	Download

Photometry and lighting design	Document Name	Download
IES File	rc740b led25s 857 w60l60 psd wh.ies	Download

© 2026 Signify Holding. All rights reserved. The information provided herein is subject to change, without notice. Signify does not give any representation or warranty as to the accuracy or completeness of the information included herein and shall not be liable for any action in reliance thereon. The information presented in this document is not intended as any commercial offer and does not form part of any quotation or contract, unless otherwise agreed by Signify. Philips and the Philips Shield Emblem are registered trademarks of Koninklijke Philips N.V.