PHILIPS

**EM254C HO BKD 7S NM3 ELD IP65**

912401483618



# Emergency Bulkhead DALI, Surface-mounted, 5 W, 6.7 W, 5 W, 350x110mm; H75, 700 lm, 5000 K, IP65, ELD3h, Non-maintained

Surface-mounted, 350x110mm; H75, Polycarbonate, White, Signal white (RAL9003), Ceiling, Wall, 700 lm, 5 W, 105 lm/W, 5000 K, (0.346, 0.356) SDCM<5, CRI70, Clear, UV stabilized Polycarbonate cover, IP65 | Dust penetration-protected, jet-proof, IK08 | 5 J vandal-protected, Safety class II, Push-in connector 4-pole, TP(a) diffuser flammability class, Emergency lighting 3 hours duration with DALI interface

## Warnings and Safety

- The battery is designed with a rated average battery design life of 50,000 hours in standby mode. The battery is supported with a standard 5year warranty; conditional of the product being maintained and operated in accordance with the manufacturer's guidelines and tested in accordance with EN50272

## General Information

| | |
|---|---|
| Number of gear units | 1 unit |
| Driver included | Yes |
| Sustainability rating | Unclassified |
| Service tag | No |
| Value ladder | Performance |
| Warranty period | 5 years |

## Light Technical

| | |
|---|---|
| Luminous Flux | 700 lm |
| Saturated Red (R9) | <50 |
| Correlated Color Temperature (Nom) | 5000 K |
| Luminous Efficacy (rated) (Nom) | 105 lm/W |
| Color rendering index (CRI) | ≥70 |
| Light source color | 750 neutral white |
| Optic type | - |
| Luminaire light beam spread | 235° |
| Unified glare rating CEN | Not applicable |

## Operating and Electrical

| | |
|---|---|
| Input Voltage | 220-240 V |
| Line Frequency | 50 Hz |
| Inrush current | 12.8 A |
| Inrush time | 0.192 ms |
| Power Consumption | 5 W |
| Power Factor (Fraction) | 0.29 |
| Connection | Push-in connector 4-pole |
| Cable | - |
| Number of products on MCB of 16 A type B | 53 |
| Suitable for random switching | Not applicable |
| Protection class IEC | Safety class II |
| Feed-through wiring | - |

## Wiring

| | |
|---|---|
| Connector Type | Push |

## Controls and Dimming

| | |
|---|---|
| Dimmable | No |
| Driver/power unit/transformer | - |
| Control interface | DALI |
| Constant light output | No |
| DALI Standard | DALI-2™ |
| Maximum dim level | Not applicable |
| Photocell | - |

## Mechanical and Housing

| | |
|---|---|
| Housing Material | Polycarbonate |
| Reflector material | - |
| Optic material | Polycarbonate |
| Optical cover material | UV stabilized Polycarbonate cover |
| Fixation material | - |
| Housing Color | White |
| Optical cover finish | Clear |
| Overall length | 350 mm |
| Overall width | 110 mm |
| Overall height | 75 mm |
| Dimensions (Height x Width x Depth) | 75 x 110 x 350 mm |
| Ingress protection code | IP65 [Dust penetration-protected, jet-proof] |
| Mech. impact protection code | IK08 [5 J vandal-protected] |
| Explosion hazard class | - |
| Mounting | Ceiling |
| Net Weight (Piece) | 1.210 kg |

## Emergency Operation

| | |
|---|---|
| Emergency flux | 700 lm |
| Power consumption during Central DC emergency mode | 6.7 W |
| Rated duration of the emergency lighting (when fully charged) | 3 hour(s) |
| Additional max. power consumption when emergency battery is charging | 5 W |
| Central Emergency | No |
| Type of emergency lighting battery | Lithium |
| Emergency lighting | Emergency lighting 3 hours duration with DALI interface |
| Emergency function testing method | Programmed automatic self testing via DALI or wireless lighting control system |
| Emergency lighting operation mode | Non-maintained |

## Approval and Application

| | |
|---|---|
| Glow-wire test | Temperature 850 °C, duration 30 s |
| Flammability mark | - |
| CE mark | Yes |
| ENEC mark | - |
| Photobiological risk | Photobiological risk group 0 @ 200mm to EN62471 |
| EU RoHS compliant | Yes |
| Diffuser Flammability Class | TP(a) diffuser flammability class |
| Performance ambient temperature Tq | 25 °C |
| Flickering value (PstLM) - Flickering value as per EN 61000-3-3 | 1 |
| Stroboscopic effect visibility measure (SVM) | 0.4 |
| Ambient temperature range | 0 to +55 °C |

## Initial Performance (IEC Compliant)

| | |
|---|---|
| Luminous flux tolerance | +/-5% |
| Initial chromaticity | (0.346, 0.356) SDCM<5 |
| Power consumption tolerance | +/-10% |

## Over Time Performance (IEC Compliant)

| | |
|---|---|
| Control gear failure rate at median useful life 35000 h | 5 % |
| Control gear failure rate at median useful life 50000 h | 10 % |
| Control gear failure rate at median useful life 75000 h | 25 % |
| Control gear failure rate at median useful life 100000 h | 50 % |
| Lumen maintenance (EN-IEC 62722-2-1) at median useful life* 35000 h | L95 |
| Lumen maintenance (EN-IEC 62722-2-1) at median useful life* 50000 h | L95 |
| Lumen maintenance (EN-IEC 62722-2-1) at median useful life* 75000 h | L90 |
| Lumen maintenance (EN-IEC 62722-2-1) at median useful life* 100000 h | L90 |

## Sustainability Data

| | |
|---|---|
| Repair class | Repair Class C, the driver of this luminaire can be replaced by a service technician. Special care is required during disassembly and reassembly, and specific tools may be required. Parts and documentation are available for a period of time. |
| Embedded carbon (A1-A3) | 17.1 kg $CO_2e$ |
| Product non-virgin material ratio | 6.86 % |
| Recyclable content ratio of the finished product | 26.8 % |
| GWP total B6 (kg CO2eq) Declared Unit | Please calculate using your local energy mix value: Power Declared Unit (kW) * Service life (hrs) Declared Unit * Energy mix (kg CO2eq / kwh) |
| GWP total B6 (kg CO2eq) Functional Unit | Please calculate using your local energy mix value: Power Declared Unit (kW) * 1000 (lm) /lumen output (lm) Declared Unit * 35000 (hrs) * Energy mix (kg CO2 eq / kwh) |
| Non-virgin material ratio of the packaging | Cardboard > 80% recycled |
| Packaging Recyclable content ratio | Cardboard recycling rate > 80% |
| Packaging Material | Cardboard |

## Product Data

| | |
|---|---|
| Order product name | EM254C HO BKD 7S NM3 ELD IP65 |
| Full product name | EM254C HO BKD 7S NM3 ELD IP65 |
| Full product code | 871951488039900 |
| Order code | 912401483618 |

| | |
|---|---|
| Material Nr. (12NC) | 912401483618 |
| Numerator - Quantity Per Pack | 1 |
| EAN/UPC - Product/Case | 8719514880399 |
| Numerator - Packs per outer box | 6 |
| EAN/UPC - Case | 8719514880214 |

## Dimensional drawing

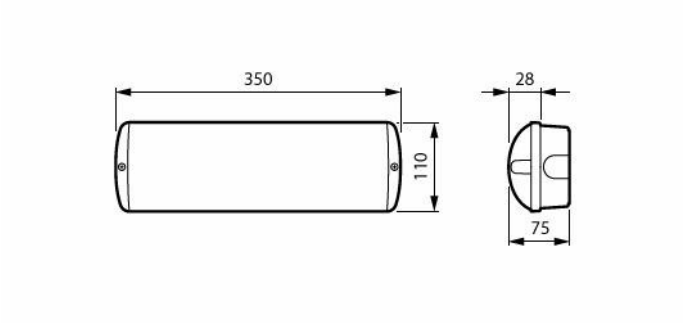


## Related Documents

| Documents and certificates | Document Name | Download |
|---|---|---|
| Installation Instructions | Emergency-Bulkhead-HO-DALI-EM254C-INI.pdf | Download |
| Tender text | Tender_Text_912401483618_en_AA.txt | Download |

| Photometry and lighting design | Document Name | Download |
|---|---|---|
| IES File | EM254C-HO-BKD-7S-NM3-ELD-IP65-912401483618.ies | Download |

© 2026 Signify Holding. All rights reserved. The information provided herein is subject to change, without notice. Signify does not give any representation or warranty as to the accuracy or completeness of the information included herein and shall not be liable for any action in reliance thereon. The information presented in this document is not intended as any commercial offer and does not form part of any quotation or contract, unless otherwise agreed by Signify. Philips and the Philips Shield Emblem are registered trademarks of Koninklijke Philips N.V.