PHILIPS

EnduraLED Bulkhead

7481713



Sturdy and Reliable versatile lighting solution

EnduraLED Bulkhead luminaire is a sustainable and reliable offering for indoor or semi-outdoor public area with IP66 ingress protection. The product offers two lumen packs with two different CCT's and suitable for verstalile applications such as staircases, industrial areas, circulation areas, lift wells etc. Pressure die cast housing and high imapact resistance polycarbonate cover make this bulkhead maintenance free solution for heavy duty industries.

Benefits

- Sturdy design that combines well with industrial applications
- Higher life class with minimal maintenacne
- Best in class efficacy ensures lower ROI
- Easy installation with standard tools
- Ensures visual comfort and reduces eye strain through diffused natural lighting

Applications

- Lift wells
- Heavy duty industries
- Indoor circulation areas
- Balconies and terraces semi outdoor area
- Government buildings

Features

- High ingress protection-IP66
- Impact resistant-IK09
- Compact integral design
- Color temperature - 4000K / 6500K and Lumen packs - 700 lm /1100 lm
- Pressure diecast housing with robust polycarbonate cover
- External mounting through simple tools
- Long lifetime: 50000 Hrs.
- Meant for Indoor Industrial Application Only.

Versions



WT202W

Dimensional drawing

Product: EnduraLED Bulkhead
Type: WT202W
Application: Indoor applications

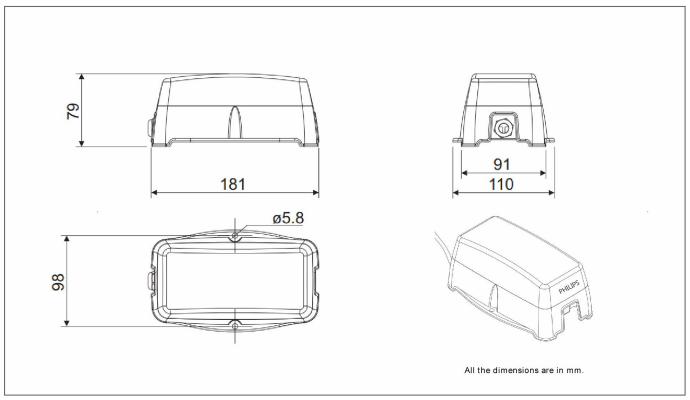

WT202W

General Information

Driver included	Yes

Light Technical

Luminous Efficacy (rated) (Nom)	110 lm/W
Color rendering index (CRI)	>80
Beam angle of light source	120 degree(s)
Optic type	Beam angle 120°

Operating and Electrical

Input Voltage	140-270 V
Protection class IEC	Safety class I

Controls and Dimming

Dimmable	No

Mechanical and Housing

Housing Color	Gray
Ingress protection code	IP66 [Dust penetration-protected, jet-proof]
Mech. impact protection code	IK09 [10 J]
Optical cover type	Polycarbonate

Approval and Application

Flammability mark	For mounting on normally flammable surfaces
Ambient temperature range	0 to +45 °C

Initial Performance (IEC Compliant)

Initial chromaticity	<5

Light Technical

Order Code	Full Product Name	Luminous Flux	Correlated Color Temperature (Nom)
919515813250	WT202W LED10S CW PSU S3 PC	1,100 lm	6500 K
919515813251	WT202W LED10S NW PSU S3 PC	1,100 lm	4000 K
919515813252	WT202W LED6S CW PSU S3 PC	700 lm	6500 K
919515813253	WT202W LED6S NW PSU S3 PC	700 lm	4000 K

Operating and Electrical

Order Code	Full Product Name	Power Consumption
919515813250	WT202W LED10S CW PSU S3 PC	10 W
919515813251	WT202W LED10S NW PSU S3 PC	10 W
919515813252	WT202W LED6S CW PSU S3 PC	6 W
919515813253	WT202W LED6S NW PSU S3 PC	6 W

© 2026 Signify Holding. All rights reserved. The information provided herein is subject to change, without notice. Signify does not give any representation or warranty as to the accuracy or completeness of the information included herein and shall not be liable for any action in reliance thereon. The information presented in this document is not intended as any commercial offer and does not form part of any quotation or contract, unless otherwise agreed by Signify. Philips and the Philips Shield Emblem are registered trademarks of Koninklijke Philips N.V.