PHILIPS

EB-Certalume for TL-D lamps

EBCTLD

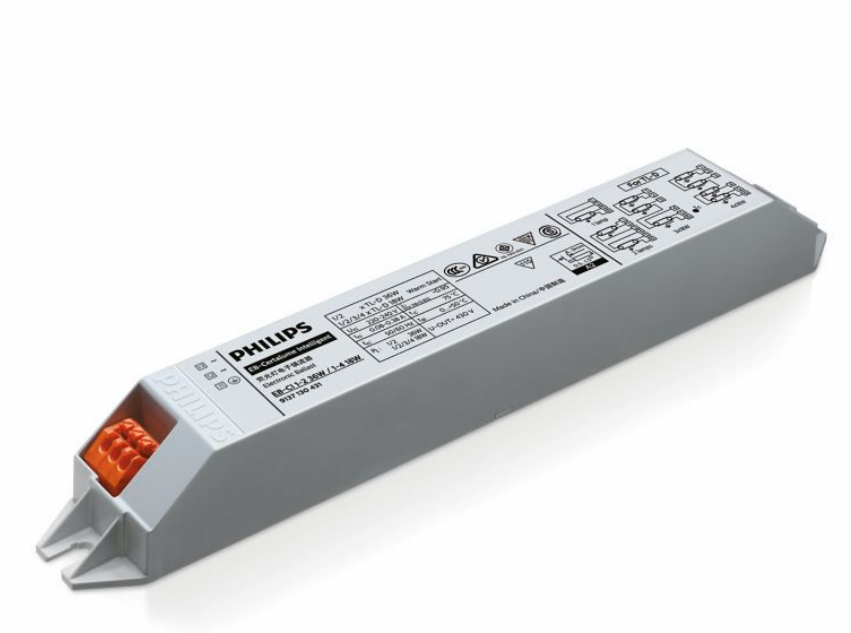

An energy-efficient solution

Affordable, reliable, high-frequency electronic ballast for TL-D fluorescent lamps, ideal alternative to electromagnetic fluorescent systems. The cost-saving and reliable EB-C has energy efficiency class A2, and its robust design meets all necessary international standards for safety and EMC. The ballast is primarily designed for Indoor application. For outdoor application, the luminaire should be minimum Classland need to be sufficiently protected against water & dust. The installation should also be guard against any lightening surge or any other necessary electrical protection as deemed in such typical installation & application.

Benefits

- Energy-saving solution (CELMA A2)
- Long lifetime of 45,000 hours @ Ta=50 °C
- Conforming to international standards for safety and EMC

Applications

- Ideal for applications with long burning hours and infrequent on/off switching activity
- Professional indoor applications (e.g. offices and hotels), department stores, shops, supermarkets and public areas and indoor lighting boxes and homes

Features

- Energy efficient CELMA A2, high power factor 0.97 with THD < 18%
- Safety according to IEC 61347-2-3, and EMC compliant with EN 55015 2006 + A1 2007
- Robust design for 45,000 hours lifetime at Ta 50 °C and avg. 6,000 on/off switches on one lamp
- Quick warm, flicker-free lamp start (< 1.0 s), no ignitor needed
- Wide voltage range for ignition and operation (165-253 V)

Versions



Fluorescent Fixed Output Gear, EB-C, TL-D



EB-C 236, 318 TL-D 220-240V 50/60Hz



EB-Ci 1-2-4 Lamp 18-36W TLD 220-240V

Dimensional drawing

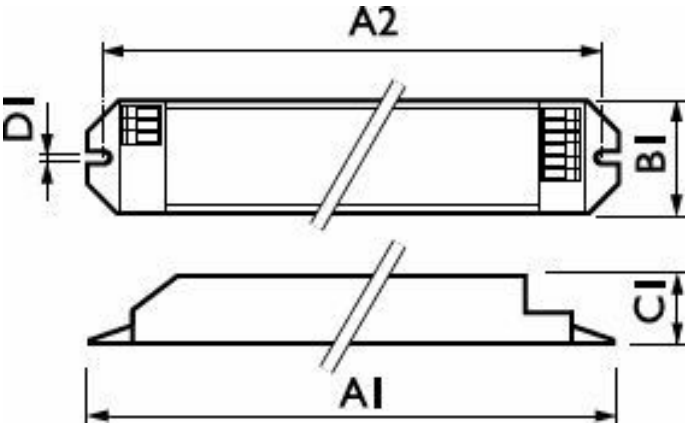

Product	D1	C1	A1	A2	B1
EB-C 118 TL-D 220-240V 50/60Hz	4.2 mm	28.0 mm	150.0 mm	140.0 mm	40.0 mm
EB-C 136 TL-D 220-240V 50/60Hz	4.2 mm	28.0 mm	150.0 mm	140.0 mm	40.0 mm
EB-C 236 TL-D 220-240V 50/60Hz	4.2 mm	30.0 mm	210.0 mm	200.0 mm	40.0 mm

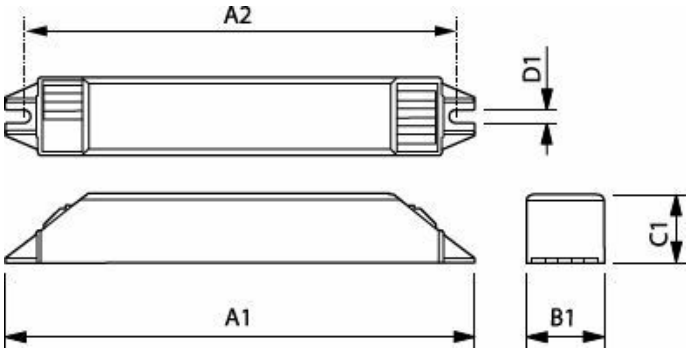

Product	A1	A2	B1	C1	D1
EB-Ci 1-2 36W / 1-4 18W 220-240V 50/60Hz	210 mm	200 mm	30 mm	26 mm	4.3 mm

Operating and Electrical

Line Frequency	50 to 60 Hz
Number of Products on MCB (16A Type B) (Max)	28

Approval and Application

Energy Efficiency Index	A2

Operating and Electrical

Order Code	Full Product Name	Input Voltage	Input Frequency	Number of Products on MCB (16A Type B) (Nom)
913713199015	EB-C 118 TL-D 220-240V 50/60Hz	220 to 240 V	50 to 60 Hz	25
913713199215	EB-C 136 TL-D 220-240V 50/60Hz	220 to 240 V	50 to 60 Hz	18
913713199315	EB-C 236 TL-D 220-240V 50/60Hz	220 to 240 V	50 to 60 Hz	28
913713043180	EB-Ci 1-2 36W / 1-4 18W 220-240V 50/60Hz	220-240 V	50 or 60 Hz	-

Mechanical and Housing

Order Code	Full Product Name	Housing
913713199015	EB-C 118 TL-D 220-240V 50/60Hz	L 150x40x28
913713199215	EB-C 136 TL-D 220-240V 50/60Hz	L 150x40x28
913713199315	EB-C 236 TL-D 220-240V 50/60Hz	L 210x40x30
913713043180	EB-Ci 1-2 36W / 1-4 18W 220-240V 50/60Hz	L210x30x26mm

© 2026 Signify Holding. All rights reserved. The information provided herein is subject to change, without notice. Signify does not give any representation or warranty as to the accuracy or completeness of the information included herein and shall not be liable for any action in reliance thereon. The information presented in this document is not intended as any commercial offer and does not form part of any quotation or contract, unless otherwise agreed by Signify. Philips and the Philips Shield Emblem are registered trademarks of Koninklijke Philips N.V.