PHILIPS

WT045C LED12/NW PSU CFW L1065

911401735842



Essential Smartbright Bulkhead, 12 W, 960 lm, 4000 K, 100° x 120°

The new Philips Essential smartbright Bulkhead offers exceptional value. It is Perfect for your everyday indoor and semi outdoor lighting installations. It comes with option of 2 sizes and is dust and waterproof.

General Information

Number of gear units	1 unit
Driver included	Yes
Light source engine type	LED
Value ladder	Value
Warranty period	1 years

Light Technical

Luminous Flux	960 lm
Correlated Color Temperature (Nom)	4000 K
Luminous Efficacy (rated) (Nom)	80 lm/W
Color rendering index (CRI)	>70
Beam angle of light source	120 degree(s)
Light source color	740 neutral white
Luminaire light beam spread	100° x 120°

Operating and Electrical

Input Voltage	220 to 240 V
Line Frequency	50 or 60 Hz
Power Consumption	12 W
Power Factor (Fraction)	0.5
Connection	Connection unit 2-pole
Number of products on MCB of 16 A type B	120
Protection class IEC	Safety class II

Controls and Dimming

Dimmable	No
Driver/power unit/transformer	Power supply unit (On/Off)
Control interface	-
Constant light output	No
Maximum dim level	Not applicable

Mechanical and Housing

Housing Material	Polypropylene
Reflector material	Polycarbonate
Optic material	Polycarbonate
Optical cover material	Polycarbonate
Fixation material	Polypropylene
Housing Color	White
Optical cover finish	Opal
Overall height	76 mm
Overall diameter	170 mm
Ingress protection code	IP65 [Dust penetration-protected, jet-proof]
Mech. impact protection code	IK06 [1 J]
Optical cover type	Polycarbonate bowl/cover
Net Weight (Piece)	0.190 kg

Approval and Application

Glow-wire test	Temperature 650 °C, duration 30 s
Flammability mark	-
CE mark	Yes
ENEC mark	-
EU RoHS compliant	No
Ambient temperature range	-30 to +35 °C

Initial Performance (IEC Compliant)

Luminous flux tolerance	+/-10%
Initial chromaticity	SDCM<6
Power consumption tolerance	+/-10%

Over Time Performance (IEC Compliant)

Driver failure rate at 5000 h	0.007 %
Median useful life L70B50	20,000 hour(s)

Product Data

Order product name	WT045C LED12/NW PSU CFW L1065
Full product name	WT045C LED12/NW PSU CFW L1065
Full product code	871016333528599
Order code	911401735842
Material Nr. (12NC)	911401735842
Numerator - Quantity Per Pack	1
EAN/UPC - Product/Case	8710163335285
Numerator - Packs per outer box	24
EAN/UPC - Case	8710163335322

Dimensional drawing

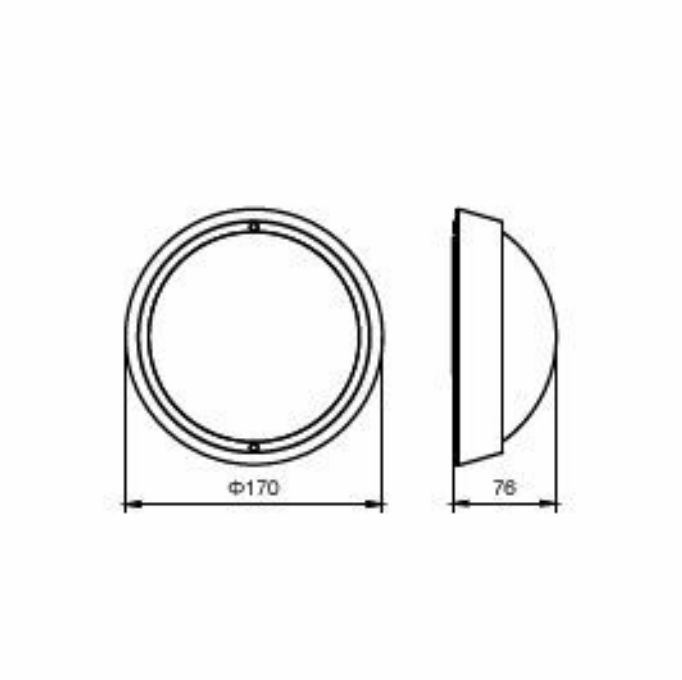

© 2026 Signify Holding. All rights reserved. The information provided herein is subject to change, without notice. Signify does not give any representation or warranty as to the accuracy or completeness of the information included herein and shall not be liable for any action in reliance thereon. The information presented in this document is not intended as any commercial offer and does not form part of any quotation or contract, unless otherwise agreed by Signify. Philips and the Philips Shield Emblem are registered trademarks of Koninklijke Philips N.V.