PHILIPS

EM151B REC 3S OA/CO NM3 ELP WH IP20

912401483506



Emergency Downlight, Recessed, 3 W, 3 W, D95 mm; H31 mm, 328 lm, 6500 K, IP20, ELP3h, Non-maintained

Recessed, D95 mm; H31 mm, Polycarbonate, White, Signal white (RAL9003), 328 lm, 3 W, 109 lm/W, 6500 K, 0.33, Open area or corridor optic, Clear, UV stabilized Polycarbonate cover, IP20 | Finger-protected, IK04 | 0.5 J standard plus, Safety class II, Push-in connector 2-pole, Emergency lighting 3 hours duration Pro version

General Information

Lamp family code	-
Number of gear units	1 unit
Driver included	Yes
Sustainability rating	Unclassified
Light source engine type	LED
Service tag	No
Mounting	Recessed
Value ladder	Value
Warranty period	5 years

Light Technical

Upward light output ratio	0.6
Luminous Flux	328 lm
Correlated Color Temperature (Nom)	6500 K
Luminous Efficacy (rated) (Nom)	109 lm/W
Color rendering index (CRI)	>80
Light source color	6500
Optic type	Open area or corridor optic
Luminaire light beam spread	165° - 160° x 50°
Optic type outdoor	-
Effective projected area	14 m^2

Operating and Electrical

Input Voltage	220-240 V
Line Frequency	50 Hz
Initial CLO power consumption	3 W
Average CLO power consumption	2.3 W
End CLO power consumption	3 W
Inrush current	1.96 A
Inrush time	100 ms
Power Consumption	3 W
Power Factor (Fraction)	0.29
Connection	Push-in connector 2-pole
Cable	0.2 meter cable (H03VVH2-F)
Number of products on MCB of 16 A type B	235
Suitable for random switching	Not applicable
Protection class IEC	Safety class II

Controls and Dimming

Dimmable	No
Driver/power unit/transformer	-
Control interface	Internal (no external connection)
Constant light output	No
Maximum dim level	Not applicable
Embedded control	-

Mechanical and Housing

Housing Material	Polycarbonate
Reflector material	-
Optic material	Polycarbonate
Optical cover material	UV stabilized Polycarbonate cover
Fixation material	-
Housing Color	White
Mounting device	-
Optical cover finish	Clear
Reflector Finish	-
Overall length	205 mm
Overall width	43 mm
Overall height	33 mm
Overall diameter	95 mm
Dimensions (Height x Width x Depth)	33 x 43 x 205 mm
Parts color	All parts colored
Ingress protection code	IP20 [Finger-protected]
Mech. impact protection code	IK04 [0.5 J standard plus]
Standard tilt angle posttop	0°
Standard tilt angle side entry	0°
Optical cover type	-
Net Weight (Piece)	0.320 kg

Emergency Operation

Emergency flux	328 lm
Rated duration of the emergency lighting (when fully charged)	3 hour(s)
Additional max. power consumption when emergency battery is charging	3 W
Central Emergency	No
Emergency lighting	Emergency lighting 3 hours duration Pro version
Emergency function testing method	Automatic pre-programmed self testing
Emergency lighting operation mode	Non-maintained

Approval and Application

Glow-wire test	-
Flammability mark	-
CE mark	Yes
ENEC mark	-
Photobiological risk	Photobiological risk group 0 @ 200mm to EN62471
Photobiological risk specification	0 m
EU RoHS compliant	Yes
Performance ambient temperature Tq	25 °C
Ambient temperature range	+5 to +45 °C

Initial Performance (IEC Compliant)

Luminous flux tolerance	+/-5%
Initial chromaticity	0.33
Power consumption tolerance	+/-10%
Init. Color Rendering Index Tolerance	+/-2

Over Time Performance (IEC Compliant)

Control gear failure rate at median useful life 35000 h	5 %
Control gear failure rate at median useful life 50000 h	10 %
Control gear failure rate at median useful life 75000 h	25 %
Control gear failure rate at median useful life 100000 h	50 %
Lumen maintenance (EN-IEC 62722-2-1) at median useful life* 35000 h	L95
Lumen maintenance (EN-IEC 62722-2-1) at median useful life* 50000 h	L95
Lumen maintenance (EN-IEC 62722-2-1) at median useful life* 75000 h	L95
Lumen maintenance (EN-IEC 62722-2-1) at median useful life* 100000 h	L95

Product Data

Order product name	EM151B REC 3S OA/CO NM3 ELP WH IP20
Full product name	EM151B REC 3S OA/CO NM3 ELP WH IP20
Full product code	871869979891800
Order code	912401483506
Material Nr. (12NC)	912401483506
Numerator - Quantity Per Pack	1
EAN/UPC - Product/Case	8718699798918
Numerator - Packs per outer box	20
EAN/UPC - Case	8718699799892

Sustainability Data

Repair class	Repair Class D, this product is not designed to be repaired.
Non-virgin material ratio of the packaging	Cardboard > 80% recycled
Packaging Recyclable content ratio	Cardboard recycling rate > 80%
Packaging Material	Cardboard

Dimensional drawing

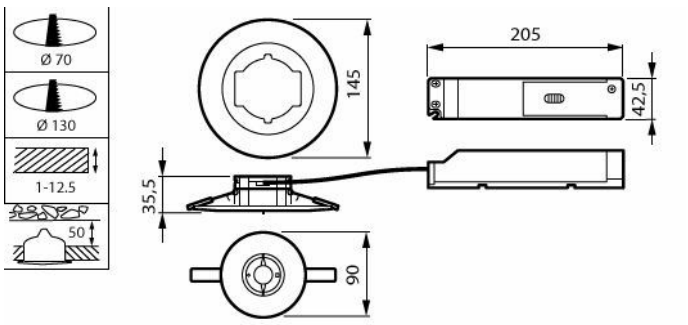

Related Documents

Documents and certificates	Document Name	Download
Installation Instructions	EM151B-REC-3S-OA-CO-UI.pdf	Download

Photometry and lighting design	Document Name	Download
IES File	EM151B-ELP-912401483506.zip	Download

© 2026 Signify Holding. All rights reserved. The information provided herein is subject to change, without notice. Signify does not give any representation or warranty as to the accuracy or completeness of the information included herein and shall not be liable for any action in reliance thereon. The information presented in this document is not intended as any commercial offer and does not form part of any quotation or contract, unless otherwise agreed by Signify. Philips and the Philips Shield Emblem are registered trademarks of Koninklijke Philips N.V.