PHILIPS

SlimPerform Batten

8683134



The most reliable and complete lighting solution for retail and industry of today and tomorrow.

Lighting plays a different role in every application. Some require latest-generation solutions with high light quality and connectivity; others just simple functionality. But whether for retail or industrial applications, you always need a combination of quality, performance, and flexibility. Get to know SlimPerform. The Batten LED luminaire where all these benefits come together. Putting the new lighting trend in your company.

Benefits

- High efficiency and longer service life to reduce operating costs
- Superior optical performance
- Easy installation
- Ready for the future

Applications

- Hypermarkets
- Supermarkets
- Wholesalers
- Department Stores
- Pet Centers
- Home Centers
- Industries
- Logistic Warehouses

Features

- Efficacy up to 169lm/W
- Quality and reliability with a lifetime > 50k hours
- Four optics options - DA (double asymmetric), WB (open), MB (medium) and HRO (corridor)
- Version with integrated emergency module with 3-hour autonomy
- Ready for Interact Indoor Navigation system
- 5-year warranty

Versions



SlimPerform Batten



SlimPerform Batten



SlimPerform White



SlimPerform Black



SlimPerform Batten



SlimPerform Batten



SlimPerform Batten



SlimPerform Batten

Dimensional drawing

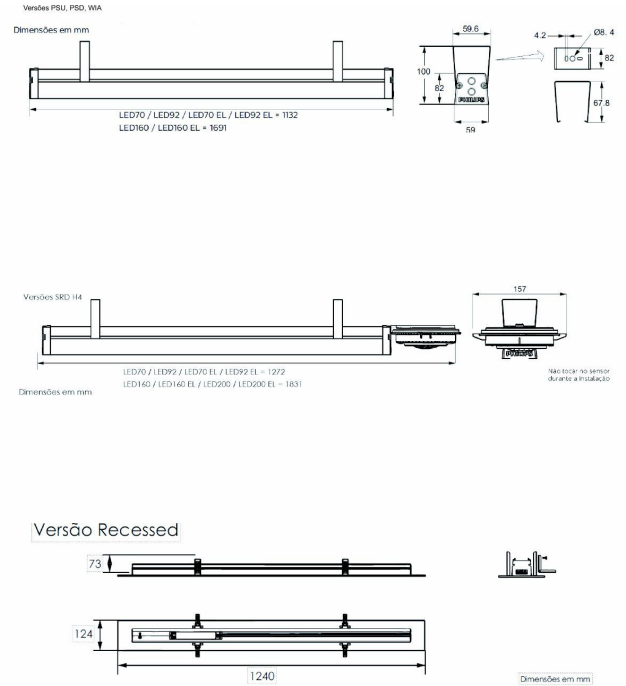

BN310P Xitanium 100W Driver Spare Part

Product details



SlimPerform Batten



SlimPerform Batten



SlimPerform Batten

General Information

Light source replaceable	No

Initial Performance (IEC Compliant)

Luminous flux tolerance	+/-10%

General Information

Order Code	Full Product Name	Driver included
919406021901	BN310P LED92/840 SRD H4 WB L1150 WH	Yes
919406021911	BN310P LED92/840 SRD H4 MB L1150 WH	Yes
919406021921	BN310P LED92/840 SRD H4 HRO L1150 WH	Yes
919406021931	BN310P LED92/840 SRD H4 DA L1150 WH	Yes
919406021941	BN310P LED92/865 SRD H4 WB L1150 WH	Yes
919406021951	BN310P LED92/865 SRD H4 MB L1150 WH	Yes
919406021961	BN310P LED92/865 SRD H4 HRO L1150 WH	Yes
919406021971	BN310P LED92/865 SRD H4 DA L1150 WH	Yes
919406021981	BN310P LED160/840 SRD H4 WB L1700 WH	Yes
919406021991	BN310P LED160/840 SRD H4 MB L1700 WH	Yes
919406022001	BN310P LED160/840 SRD H4 HRO L1700 WH	Yes
919406022011	BN310P LED160/865 SRD H4 WB L1700 WH	Yes
919406022041	BN310P LED200/840 SRD H4 WB L1700 WH	Yes
919406022051	BN310P LED200/840 SRD H4 MB L1700 WH	Yes
919406022061	BN310P LED200/840 SRD H4 HRO L1700 WH	Yes
919406022071	BN310P LED200/865 SRD H4 WB L1700 WH	Yes
919406022081	BN310P LED200/865 SRD H4 MB L1700 WH	Yes
919406022091	BN310P LED200/865 SRD H4 HRO L1700 WH	Yes
919506310581	BN310P Xitanium 60W Driver Spare Part	Yes
820619284351	BN310P LED92/840 PSU HRO L1150 WH	Yes
820619284711	BN310P LED160/850 PSU WB L1700 WH	Yes
820619284721	BN310P LED160/850 PSU HRO L1700 WH	Yes
820619284731	BN310P LED160/850 PSU MB L1700 WH	Yes
820619284781	BN310P LED130/850 PSU HRO L1700 WH	Yes
820619284791	BN310P LED130/850 PSU MB L1700 WH	Yes
820619284801	BN310P LED130/850 PSU WB L1700 WH	Yes
919406020751	BN310P LED70/840 PSD- VLC WB L1150 WH	Yes
919406020771	BN310P LED92/840 PSD- VLC WB L1150 WH	Yes
919406020781	BN310P LED92/840 PSD- VLC WB EL L1150 WH	Yes
919406020811	BN310P LED160/840PSD- VLC WB EL L1700 WH	Yes
919406020821	BN310P LED70/865 PSU MB L1150 WH	Yes
919406020831	BN310P LED70 /865 PSD- VLC MB L1150 WH	Yes
919406020841	BN310P LED92/830 PSU DA L1150 WH	Yes
919406020851	BN310P LED92/830 PSD- VLC DA L1150 WH	Yes
919406020891	BN310P LED160/865 PSD- VLC HRO L1700 WH	Yes
919406020901	BN310P LED92/865 PSU DA L1150 WH	Yes
919406020911	BN310P LED92/865 PSD- VLC DA L1150 WH	Yes
919406020951	BN310P LED70/865 PSU WB L1150 WH	Yes
919406020961	BN310P LED70/865 PSD-VLC WB L1150 WH	Yes
919406020981	BN310P LED70/840 PSU WB EL L1150 WH	Yes
919406020991	BN310P LED70/840 PSD-VLC WB EL L1150 WH	Yes

Order Code	Full Product Name	Driver included
919406021001	BN310P LED70/830 PSU MB L1150 WH	Yes
919406021011	BN310P LED70/830 PSD-VLC MB L1150 WH	Yes
919406021021	BN310P LED70/830 PSU WB L1150 WH	Yes
919406021031	BN310P LED70/830 PSD-VLC WB L1150 WH	Yes
919406021041	BN310P LED92/865 PSU MB L1150 WH	Yes
919406021051	BN310P LED92/865 PSD-VLC MB L1150 WH	Yes
919406021061	BN310P LED92/865 PSU MB EL L1150 WH	Yes
919406021071	BN310P LED92/865 PSD-VLC MB EL L1150 WH	Yes
919406021081	BN310P LED92/865 PSU WB L1150 WH	Yes
919406021091	BN310P LED92/865 PSD-VLC WB L1150 WH	Yes
919406021101	BN310P LED92/865 PSU WB EL L1150 WH	Yes
919406021111	BN310P LED92/865 PSD WB EL L1150 WH	Yes
919406021121	BN310P LED92/865 PSU DA EL L1150 WH	Yes
919406021131	BN310P LED92/865 PSD-VLC DA EL L1150 WH	Yes
919406021151	BN310P LED92/840 PSD-VLC MB L1150 WH	Yes
919406021161	BN310P LED92/840 PSU MB EL L1150 WH	Yes
919406021171	BN310P LED92/840 PSD-VLC MB EL L1150 WH	Yes
919406021181	BN310P LED92/840 PSU WB EL L1150 WH	Yes
919406021191	BN310P LED92/840 PSU DA EL L1150 WH	Yes
919406021201	BN310P LED92/840 PSD-VLC DA EL L1150 WH	Yes
919406021221	BN310P LED92/830 PSD-VLC MB L1150 WH	Yes
919406021231	BN310P LED92/830 PSU MB EL L1150 WH	Yes
919406021241	BN310P LED92/830 PSD-VLC MB EL L1150 WH	Yes
919406021251	BN310P LED92/830 PSU WB L1150 WH	Yes
919406021261	BN310P LED92/830 PSD-VLC WB L1150 WH	Yes
919406021271	BN310P LED92/830 PSU WB EL L1150 WH	Yes
919406021281	BN310P LED92/830 PSD-VLC WB EL L1150 WH	Yes
919406021291	BN310P LED92/830 PSU DA EL L1150 WH	Yes
919406021301	BN310P LED92/830 PSD-VLC DA EL L1150 WH	Yes
919406021351	BN310P LED160/865 PSD-VLC MB L1700 WH	Yes
919406021361	BN310P LED160/865 PSU MB EL L1700 WH	Yes
919406021371	BN310P LED160/865 PSD-VLC MB EL L1700 WH	Yes
919406021391	BN310P LED160/865 PSD-VLC WB L1700 WH	Yes
919406021401	BN310P LED160/865 PSU WB EL L1700 WH	Yes
919406021411	BN310P LED160/865 PSD-VLC WB EL L1700 WH	Yes
919406021421	BN310P LED160/865 PSU HRO EL L1700 WH	Yes
919406021431	BN310P LED160/865PSD-VLC HRO EL L1700 WH	Yes
919406021441	BN310P LED160/840 PSU MB L1700 WH	Yes
919406021451	BN310P LED160/840 PSD-VLC MB L1700 WH	Yes
919406021461	BN310P LED160/840 PSU MB EL L1700 WH	Yes
919406021471	BN310P LED160/840 PSD-VLC MB EL L1700 WH	Yes
919406021481	BN310P LED160/840 PSU WB EL L1700 WH	Yes

Order Code	Full Product Name	Driver included
919406021491	BN310P LED160/840 PSD-VLC HRO L1700 WH	Yes
919406021501	BN310P LED160/840 PSU HRO EL L1700 WH	Yes
919406021511	BN310P LED160/840PSD-VLC HRO EL L1700 WH	Yes
919406021521	BN310P LED92/840 PSU DA L1150 WH	Yes
919406021531	BN310P LED92/840 PSD- VLC DA L1150 WH	Yes
919406021621	BN310P LED200/840 PSD- VLC WB L1700 WH	Yes
919406021631	BN310P LED200/840 PSD-VLC HRO L1700 WH	Yes
919406021641	BN310P LED200/840 PSD-VLC MB EL L1700 WH	Yes
919406021651	BN310P LED200/840 PSD-VLC MB L1700 WH	Yes
919406021661	BN310P LED200/840 PSU HRO EL L1700 WH	Yes
919406021671	BN310P LED200/840 PSU HRO L1700 WH	Yes
919406021681	BN310P LED200/840 PSU MB EL L1700 WH	Yes
919406021701	BN310P LED200/840 PSU WB EL L1700 WH	Yes
919406021721	BN310P LED200/840PSD-VLC WB EL L1700 WH	Yes
919406021731	BN310P LED200/840PSD-VLC HRO EL L1700WH	Yes
919406021741	BN310P LED200/865 PSD-V LC HRO L1700 WH	Yes
919406021751	BN310P LED200/865 PSD-VLC MB EL L1700 WH	Yes
919406021761	BN310P LED200/865 PSD-VLC MB L1700 WH	Yes
919406021771	BN310P LED200/865 PSD-VLC WB EL L1700 WH	Yes
919406021781	BN310P LED200/865 PSD-VLC WB L1700 WH	Yes
919406021791	BN310P LED200/865 PSU HRO EL L1700 WH	Yes
919406021811	BN310P LED200/865 PSU MB EL L1700 WH	Yes
919406021821	BN310P LED200/865 PSU MB L1700 WH	Yes
919406021831	BN310P LED200/865 PSU WB EL L1700 WH	Yes
919406021841	BN310P LED200/865 PSU WB L1700 WH	Yes
919406021851	BN310P LED200/865PSD-VLC HRO EL L1700 WH	Yes
919406021861	BN310P LED70/840 WIA WB L1150 WH	Yes
919406021881	BN310P LED70/865 WIA WB L1150 WH	Yes
919406021891	BN310P LED70/865 WIA MB L1150 WH	Yes
919406022101	BN310P LED230/840 PSD- VLC WB L1700 WH	Yes
919406022111	BN310P LED230/840 PSD-VLC HRO L1700 WH	Yes
919406022121	BN310P LED230/840 PSD-VLC MB L1700 WH	Yes
820619284281	BN310P LED92/865 PSU MB L1150 BK	Yes
820619284431	BN310P LED92/830 PSU MB L1150 BK	Yes
820619284681	BN310P LED70/840 PSU WB L1150 BK	Yes
820619284691	BN310P LED70/840 PSU WB EL L1150 BK	Yes
820619284701	BN310P LED70/830 PSU MB L1150 BK	Yes
919406020861	BN310P LED92/840 PSU DA L1150 BK	Yes
919406020871	BN310P LED92/840 PSD- VLC DA L1150 BK	Yes
919406020941	BN310P LED92/840 PSU WB L1150 BK	Yes
919406021311	BN310P LED92/840 PSD-VLC WB L1150 BK	Yes
919406021321	BN310P LED92/840 PSU WB EL L1150 BK	Yes

Order Code	Full Product Name	Driver included
919406021331	BN310P LED92/840 PSD-VLC WB EL L1150 BK	Yes
919506310591	BN310P Xitanium 100W Driver Spare Part	Yes
919506310621	KIT 10x BN310P Bracket White Spare Parts	No
919506310631	BN310P Bracket Black Spare Part	No
919506310601	BN310P CertaDriver 44W Spare Part 5 PCES	Yes
919506310611	BN310P CertaDriver 65W Spare Part 5 PCES	Yes

Light Technical

Order Code	Full Product Name	Luminous Flux	Correlated Color Temperature (Nom)	Luminous Efficacy (rated) (Nom)	Color rendering index (CRI)
919406021901	BN310P LED92/840 SRD H4 WB L1150 WH	9,500 lm	4000 K	163.8 lm/W	>80
919406021911	BN310P LED92/840 SRD H4 MB L1150 WH	9,500 lm	4000 K	163.8 lm/W	>80
919406021921	BN310P LED92/840 SRD H4 HRO L1150 WH	9,500 lm	4000 K	163.8 lm/W	>80
919406021931	BN310P LED92/840 SRD H4 DA L1150 WH	9,500 lm	4000 K	163.8 lm/W	>80
919406021941	BN310P LED92/865 SRD H4 WB L1150 WH	9,500 lm	6500 K	163.8 lm/W	>80
919406021951	BN310P LED92/865 SRD H4 MB L1150 WH	9,500 lm	6500 K	163.8 lm/W	>80
919406021961	BN310P LED92/865 SRD H4 HRO L1150 WH	9,500 lm	6500 K	163.8 lm/W	>80
919406021971	BN310P LED92/865 SRD H4 DA L1150 WH	9,500 lm	6500 K	163.8 lm/W	>80
919406021981	BN310P LED160/840 SRD H4 WB L1700 WH	16,500 lm	4000 K	161.77 lm/W	>80
919406021991	BN310P LED160/840 SRD H4 MB L1700 WH	16,500 lm	4000 K	161.77 lm/W	>80
919406022001	BN310P LED160/840 SRD H4 HRO L1700 WH	16,500 lm	4000 K	161.77 lm/W	>80
919406022011	BN310P LED160/865 SRD H4 WB L1700 WH	16,500 lm	6500 K	161.77 lm/W	>80
919406022041	BN310P LED200/840 SRD H4 WB L1700 WH	20,000 lm	4000 K	155.04 lm/W	>80
919406022051	BN310P LED200/840 SRD H4 MB L1700 WH	20,000 lm	4000 K	155.04 lm/W	>80
919406022061	BN310P LED200/840 SRD H4 HRO L1700 WH	20,000 lm	4000 K	155.04 lm/W	>80
919406022071	BN310P LED200/865 SRD H4 WB L1700 WH	20,000 lm	6500 K	155.04 lm/W	>80
919406022081	BN310P LED200/865 SRD H4 MB L1700 WH	20,000 lm	6500 K	155.04 lm/W	>80
919406022091	BN310P LED200/865 SRD H4 HRO L1700 WH	20,000 lm	6500 K	155.04 lm/W	>80
919506310581	BN310P Xitanium 60W Driver Spare Part	0 lm	-	0 lm/W	-
820619284351	BN310P LED92/840 PSU HRO L1150 WH	9,500 lm	4000 K	169.65 lm/W	>80
820619284711	BN310P LED160/850 PSU WB L1700 WH	16,500 lm	5000 K	163.37 lm/W	>80
820619284721	BN310P LED160/850 PSU HRO L1700 WH	16,500 lm	5000 K	163.37 lm/W	>80
820619284731	BN310P LED160/850 PSU MB L1700 WH	16,500 lm	5000 K	163.37 lm/W	>80
820619284781	BN310P LED130/850 PSU HRO L1700 WH	14,154 lm	5000 K	162.69 lm/W	>80
820619284791	BN310P LED130/850 PSU MB L1700 WH	14,154 lm	5000 K	162.69 lm/W	>80
820619284801	BN310P LED130/850 PSU WB L1700 WH	14,154 lm	5000 K	162.69 lm/W	>80
919406020751	BN310P LED70/840 PSD- VLC WB L1150 WH	7,100 lm	4000 K	161.36363636363637 lm/W	>80
919406020771	BN310P LED92/840 PSD- VLC WB L1150 WH	9,500 lm	4000 K	163.79310344827587 lm/W	>80
919406020781	BN310P LED92/840 PSD- VLC WB EL L1150 WH	9,500 lm	4000 K	163.79310344827587 lm/W	>80
919406020811	BN310P LED160/840PSD- VLC WB EL L1700 WH	16,500 lm	4000 K	161.76470588235293 lm/W	>80
919406020821	BN310P LED70/865 PSU MB L1150 WH	7,100 lm	6500 K	165.11627906976744 lm/W	>80

Order Code	Full Product Name	Luminous Flux	Correlated Color Temperature (Nom)	Luminous Efficacy (rated) (Nom)	Color rendering index (CRI)
919406020831	BN310P LED70 /865 PSD- VLC MB L1150 WH	7,100 lm	6500 K	161.36363636363637 lm/W	>80
919406020841	BN310P LED92/830 PSU DA L1150 WH	9,200 lm	3000 K	164.28571428571428 lm/W	>80
919406020851	BN310P LED92/830 PSD- VLC DA L1150 WH	9,200 lm	3000 K	158.6206896551724 lm/W	>80
919406020891	BN310P LED160/865 PSD- VLC HRO L1700 WH	16,500 lm	6500 K	161.76470588235293 lm/W	>80
919406020901	BN310P LED92/865 PSU DA L1150 WH	9,500 lm	6500 K	169.64285714285714 lm/W	>80
919406020911	BN310P LED92/865 PSD- VLC DA L1150 WH	9,500 lm	6500 K	163.79310344827587 lm/W	>80
919406020951	BN310P LED70/865 PSU WB L1150 WH	7,100 lm	6500 K	165.11627906976744 lm/W	>80
919406020961	BN310P LED70/865 PSD-VLC WB L1150 WH	7,100 lm	6500 K	161.36363636363637 lm/W	>80
919406020981	BN310P LED70/840 PSU WB EL L1150 WH	7,100 lm	4000 K	161.36363636363637 lm/W	>80
919406020991	BN310P LED70/840 PSD-VLC WB EL L1150 WH	7,100 lm	4000 K	161.36363636363637 lm/W	>80
919406021001	BN310P LED70/830 PSU MB L1150 WH	7,000 lm	3000 K	162.7906976744186 lm/W	>80
919406021011	BN310P LED70/830 PSD-VLC MB L1150 WH	7,000 lm	3000 K	159.0909090909091 lm/W	>80
919406021021	BN310P LED70/830 PSU WB L1150 WH	7,000 lm	3000 K	162.7906976744186 lm/W	>80
919406021031	BN310P LED70/830 PSD-VLC WB L1150 WH	7,000 lm	3000 K	159.0909090909091 lm/W	>80
919406021041	BN310P LED92/865 PSU MB L1150 WH	9,500 lm	6500 K	169.64285714285714 lm/W	>80
919406021051	BN310P LED92/865 PSD-VLC MB L1150 WH	9,500 lm	6500 K	163.79310344827587 lm/W	>80
919406021061	BN310P LED92/865 PSU MB EL L1150 WH	9,500 lm	6500 K	169.64285714285714 lm/W	>80
919406021071	BN310P LED92/865 PSD-VLC MB EL L1150 WH	9,500 lm	6500 K	163.79310344827587 lm/W	>80
919406021081	BN310P LED92/865 PSU WB L1150 WH	9,500 lm	6500 K	169.64285714285714 lm/W	>80
919406021091	BN310P LED92/865 PSD-VLC WB L1150 WH	9,500 lm	6500 K	163.79310344827587 lm/W	>80
919406021101	BN310P LED92/865 PSU WB EL L1150 WH	9,500 lm	6500 K	169.64285714285714 lm/W	>80
919406021111	BN310P LED92/865 PSD WB EL L1150 WH	9,500 lm	6500 K	163.79310344827587 lm/W	>80
919406021121	BN310P LED92/865 PSU DA EL L1150 WH	9,500 lm	6500 K	169.64285714285714 lm/W	>80
919406021131	BN310P LED92/865 PSD-VLC DA EL L1150 WH	9,500 lm	6500 K	163.79310344827587 lm/W	>80
919406021151	BN310P LED92/840 PSD-VLC MB L1150 WH	9,500 lm	4000 K	163.79310344827587 lm/W	>80
919406021161	BN310P LED92/840 PSU MB EL L1150 WH	9,500 lm	4000 K	169.64285714285714 lm/W	>80
919406021171	BN310P LED92/840 PSD-VLC MB EL L1150 WH	9,500 lm	4000 K	163.79310344827587 lm/W	>80
919406021181	BN310P LED92/840 PSU WB EL L1150 WH	9,500 lm	4000 K	169.64285714285714 lm/W	>80
919406021191	BN310P LED92/840 PSU DA EL L1150 WH	9,500 lm	4000 K	169.64285714285714 lm/W	>80
919406021201	BN310P LED92/840 PSD-VLC DA EL L1150 WH	9,500 lm	4000 K	163.79310344827587 lm/W	>80
919406021221	BN310P LED92/830 PSD-VLC MB L1150 WH	9,200 lm	3000 K	158.6206896551724 lm/W	>80
919406021231	BN310P LED92/830 PSU MB EL L1150 WH	9,200 lm	3000 K	164.28571428571428 lm/W	>80
919406021241	BN310P LED92/830 PSD-VLC MB EL L1150 WH	9,200 lm	3000 K	158.6206896551724 lm/W	>80
919406021251	BN310P LED92/830 PSU WB L1150 WH	9,200 lm	3000 K	164.28571428571428 lm/W	>80
919406021261	BN310P LED92/830 PSD-VLC WB L1150 WH	9,200 lm	3000 K	158.6206896551724 lm/W	>80
919406021271	BN310P LED92/830 PSU WB EL L1150 WH	9,200 lm	3000 K	164.28571428571428 lm/W	>80
919406021281	BN310P LED92/830 PSD-VLC WB EL L1150 WH	9,200 lm	3000 K	158.6206896551724 lm/W	>80
919406021291	BN310P LED92/830 PSU DA EL L1150 WH	9,200 lm	3000 K	164.28571428571428 lm/W	>80
919406021301	BN310P LED92/830 PSD-VLC DA EL L1150 WH	9,200 lm	3000 K	158.6206896551724 lm/W	>80
919406021351	BN310P LED160/865 PSD-VLC MB L1700 WH	16,500 lm	6500 K	161.76470588235293 lm/W	>80
919406021361	BN310P LED160/865 PSU MB EL L1700 WH	16,500 lm	6500 K	163.36633663366337 lm/W	>80
919406021371	BN310P LED160/865 PSD-VLC MB EL L1700 WH	16,500 lm	6500 K	161.76470588235293 lm/W	>80

Order Code	Full Product Name	Luminous Flux	Correlated Color Temperature (Nom)	Luminous Efficacy (rated) (Nom)	Color rendering index (CRI)
919406021391	BN310P LED160/865 PSD-VLC WB L1700 WH	16,500 lm	6500 K	161.76470588235293 lm/W	>80
919406021401	BN310P LED160/865 PSU WB EL L1700 WH	16,500 lm	6500 K	163.36633663366337 lm/W	>80
919406021411	BN310P LED160/865 PSD-VLC WB EL L1700 WH	16,500 lm	6500 K	161.76470588235293 lm/W	>80
919406021421	BN310P LED160/865 PSU HRO EL L1700 WH	16,500 lm	6500 K	163.36633663366337 lm/W	>80
919406021431	BN310P LED160/865PSD-VLC HRO EL L1700 WH	16,500 lm	6500 K	161.76470588235293 lm/W	>80
919406021441	BN310P LED160/840 PSU MB L1700 WH	16,500 lm	4000 K	163.36633663366337 lm/W	>80
919406021451	BN310P LED160/840 PSD-VLC MB L1700 WH	16,500 lm	4000 K	161.76470588235293 lm/W	>80
919406021461	BN310P LED160/840 PSU MB EL L1700 WH	16,500 lm	4000 K	163.36633663366337 lm/W	>80
919406021471	BN310P LED160/840 PSD-VLC MB EL L1700 WH	16,500 lm	4000 K	161.76470588235293 lm/W	>80
919406021481	BN310P LED160/840 PSU WB EL L1700 WH	16,500 lm	4000 K	163.36633663366337 lm/W	>80
919406021491	BN310P LED160/840 PSD-VLC HRO L1700 WH	16,500 lm	4000 K	161.76470588235293 lm/W	>80
919406021501	BN310P LED160/840 PSU HRO EL L1700 WH	16,500 lm	4000 K	163.36633663366337 lm/W	>80
919406021511	BN310P LED160/840PSD-VLC HRO EL L1700 WH	16,500 lm	4000 K	161.76470588235293 lm/W	>80
919406021521	BN310P LED92/840 PSU DA L1150 WH	9,500 lm	4000 K	169.64285714285714 lm/W	>80
919406021531	BN310P LED92/840 PSD- VLC DA L1150 WH	9,500 lm	4000 K	163.79310344827587 lm/W	>80
919406021621	BN310P LED200/840 PSD- VLC WB L1700 WH	20,000 lm	4000 K	155.04 lm/W	>80
919406021631	BN310P LED200/840 PSD-VLC HRO L1700 WH	20,000 lm	4000 K	155.04 lm/W	>80
919406021641	BN310P LED200/840 PSD-VLC MB EL L1700 WH	20,000 lm	4000 K	155.04 lm/W	>80
919406021651	BN310P LED200/840 PSD-VLC MB L1700 WH	20,000 lm	4000 K	155.04 lm/W	>80
919406021661	BN310P LED200/840 PSU HRO EL L1700 WH	20,000 lm	4000 K	155.04 lm/W	>80
919406021671	BN310P LED200/840 PSU HRO L1700 WH	20,000 lm	4000 K	155.04 lm/W	>80
919406021681	BN310P LED200/840 PSU MB EL L1700 WH	20,000 lm	4000 K	155.04 lm/W	>80
919406021701	BN310P LED200/840 PSU WB EL L1700 WH	20,000 lm	4000 K	155.04 lm/W	>80
919406021721	BN310P LED200/840PSD-VLC WB EL L1700 WH	20,000 lm	4000 K	155.04 lm/W	>80
919406021731	BN310P LED200/840PSD-VLC HRO EL L1700WH	20,000 lm	4000 K	155.04 lm/W	>80
919406021741	BN310P LED200/865 PSD-V LC HRO L1700 WH	20,000 lm	6500 K	155.04 lm/W	>80
919406021751	BN310P LED200/865 PSD-VLC MB EL L1700 WH	20,000 lm	6500 K	155.04 lm/W	>80
919406021761	BN310P LED200/865 PSD-VLC MB L1700 WH	20,000 lm	6500 K	155.04 lm/W	>80
919406021771	BN310P LED200/865 PSD-VLC WB EL L1700 WH	20,000 lm	6500 K	155.04 lm/W	>80
919406021781	BN310P LED200/865 PSD-VLC WB L1700 WH	20,000 lm	6500 K	155.04 lm/W	>80
919406021791	BN310P LED200/865 PSU HRO EL L1700 WH	20,000 lm	6500 K	155.04 lm/W	>80
919406021811	BN310P LED200/865 PSU MB EL L1700 WH	20,000 lm	6500 K	155.04 lm/W	>80
919406021821	BN310P LED200/865 PSU MB L1700 WH	20,000 lm	6500 K	155.04 lm/W	>80
919406021831	BN310P LED200/865 PSU WB EL L1700 WH	20,000 lm	6500 K	155.04 lm/W	>80
919406021841	BN310P LED200/865 PSU WB L1700 WH	20,000 lm	6500 K	155.04 lm/W	>80
919406021851	BN310P LED200/865PSD-VLC HRO EL L1700 WH	20,000 lm	6500 K	155.04 lm/W	>80
919406021861	BN310P LED70/840 WIA WB L1150 WH	7,100 lm	4000 K	161.37 lm/W	>80
919406021881	BN310P LED70/865 WIA WB L1150 WH	7,100 lm	6500 K	161.37 lm/W	>80
919406021891	BN310P LED70/865 WIA MB L1150 WH	7,100 lm	6500 K	161.37 lm/W	>80
919406022101	BN310P LED230/840 PSD- VLC WB L1700 WH	23,000 lm	4000 K	150.33 lm/W	>80
919406022111	BN310P LED230/840 PSD-VLC HRO L1700 WH	23,000 lm	4000 K	150.33 lm/W	>80
919406022121	BN310P LED230/840 PSD-VLC MB L1700 WH	23,000 lm	4000 K	150.33 lm/W	>80

Order Code	Full Product Name	Luminous Flux	Correlated Color Temperature (Nom)	Luminous Efficacy (rated) (Nom)	Color rendering index (CRI)
820619284281	BN310P LED92/865 PSU MB L1150 BK	9,500 lm	6500 K	169.65 lm/W	>80
820619284431	BN310P LED92/830 PSU MB L1150 BK	9,200 lm	3000 K	164.29 lm/W	>80
820619284681	BN310P LED70/840 PSU WB L1150 BK	7,100 lm	4000 K	165.12 lm/W	>80
820619284691	BN310P LED70/840 PSU WB EL L1150 BK	7,100 lm	4000 K	165.12 lm/W	>80
820619284701	BN310P LED70/830 PSU MB L1150 BK	7,000 lm	3000 K	162.8 lm/W	>80
919406020861	BN310P LED92/840 PSU DA L1150 BK	9,500 lm	4000 K	169.64285714285714 lm/W	>80
919406020871	BN310P LED92/840 PSD- VLC DA L1150 BK	9,500 lm	4000 K	163.79310344827587 lm/W	>80
919406020941	BN310P LED92/840 PSU WB L1150 BK	9,500 lm	4000 K	169.64285714285714 lm/W	>80
919406021311	BN310P LED92/840 PSD-VLC WB L1150 BK	9,500 lm	4000 K	163.79310344827587 lm/W	>80
919406021321	BN310P LED92/840 PSU WB EL L1150 BK	9,500 lm	4000 K	169.64285714285714 lm/W	>80
919406021331	BN310P LED92/840 PSD-VLC WB EL L1150 BK	9,500 lm	4000 K	163.79310344827587 lm/W	>80
919506310591	BN310P Xitanium 100W Driver Spare Part	0 lm	-	0 lm/W	-
919506310621	KIT 10x BN310P Bracket White Spare Parts	0 lm	-	0 lm/W	-
919506310631	BN310P Bracket Black Spare Part	0 lm	-	0 lm/W	-
919506310601	BN310P CertaDriver 44W Spare Part 5 PCES	0 lm	-	0 lm/W	-
919506310611	BN310P CertaDriver 65W Spare Part 5 PCES	0 lm	-	0 lm/W	-

Operating and Electrical

Order Code	Full Product Name	Input Voltage	Line Frequency	Power Consumption	Protection class IEC
919406021901	BN310P LED92/840 SRD H4 WB L1150 WH	220 to 240 V	50 or 60 Hz	58 W	Safety class I
919406021911	BN310P LED92/840 SRD H4 MB L1150 WH	220 to 240 V	50 or 60 Hz	58 W	Safety class I
919406021921	BN310P LED92/840 SRD H4 HRO L1150 WH	220 to 240 V	50 or 60 Hz	58 W	Safety class I
919406021931	BN310P LED92/840 SRD H4 DA L1150 WH	220 to 240 V	50 or 60 Hz	58 W	Safety class I
919406021941	BN310P LED92/865 SRD H4 WB L1150 WH	220 to 240 V	50 or 60 Hz	58 W	Safety class I
919406021951	BN310P LED92/865 SRD H4 MB L1150 WH	220 to 240 V	50 or 60 Hz	58 W	Safety class I
919406021961	BN310P LED92/865 SRD H4 HRO L1150 WH	220 to 240 V	50 or 60 Hz	58 W	Safety class I
919406021971	BN310P LED92/865 SRD H4 DA L1150 WH	220 to 240 V	50 or 60 Hz	58 W	Safety class I
919406021981	BN310P LED160/840 SRD H4 WB L1700 WH	220 to 240 V	50 or 60 Hz	102 W	Safety class I
919406021991	BN310P LED160/840 SRD H4 MB L1700 WH	220 to 240 V	50 or 60 Hz	102 W	Safety class I
919406022001	BN310P LED160/840 SRD H4 HRO L1700 WH	220 to 240 V	50 or 60 Hz	102 W	Safety class I
919406022011	BN310P LED160/865 SRD H4 WB L1700 WH	220 to 240 V	50 or 60 Hz	102 W	Safety class I
919406022041	BN310P LED200/840 SRD H4 WB L1700 WH	220 to 240 V	50 or 60 Hz	129 W	Safety class I
919406022051	BN310P LED200/840 SRD H4 MB L1700 WH	220 to 240 V	50 or 60 Hz	129 W	Safety class I
919406022061	BN310P LED200/840 SRD H4 HRO L1700 WH	220 to 240 V	50 or 60 Hz	129 W	Safety class I
919406022071	BN310P LED200/865 SRD H4 WB L1700 WH	220 to 240 V	50 or 60 Hz	129 W	Safety class I
919406022081	BN310P LED200/865 SRD H4 MB L1700 WH	220 to 240 V	50 or 60 Hz	129 W	Safety class I
919406022091	BN310P LED200/865 SRD H4 HRO L1700 WH	220 to 240 V	50 or 60 Hz	129 W	Safety class I
919506310581	BN310P Xitanium 60W Driver Spare Part	220 to 240 V	- Hz	60 W	Safety class I
820619284351	BN310P LED92/840 PSU HRO L1150 WH	220 to 240 V	50 or 60 Hz	56 W	Safety class I
820619284711	BN310P LED160/850 PSU WB L1700 WH	220 to 240 V	50 or 60 Hz	101 W	Safety class I

Order Code	Full Product Name	Input Voltage	Line Frequency	Power Consumption	Protection class IEC
820619284721	BN310P LED160/850 PSU HRO L1700 WH	220 to 240 V	50 or 60 Hz	101 W	Safety class I
820619284731	BN310P LED160/850 PSU MB L1700 WH	220 to 240 V	50 or 60 Hz	101 W	Safety class I
820619284781	BN310P LED130/850 PSU HRO L1700 WH	220 to 240 V	50 or 60 Hz	87 W	Safety class I
820619284791	BN310P LED130/850 PSU MB L1700 WH	220 to 240 V	50 or 60 Hz	87 W	Safety class I
820619284801	BN310P LED130/850 PSU WB L1700 WH	220 to 240 V	50 or 60 Hz	87 W	Safety class I
919406020751	BN310P LED70/840 PSD- VLC WB L1150 WH	220 to 240 V	50 or 60 Hz	44 W	Safety class I
919406020771	BN310P LED92/840 PSD- VLC WB L1150 WH	220 to 240 V	50 or 60 Hz	58 W	Safety class I
919406020781	BN310P LED92/840 PSD- VLC WB EL L1150 WH	220 to 240 V	50 or 60 Hz	58 W	Safety class I
919406020811	BN310P LED160/840PSD- VLC WB EL L1700 WH	220 to 240 V	50 or 60 Hz	102 W	Safety class I
919406020821	BN310P LED70/865 PSU MB L1150 WH	220 to 240 V	50 or 60 Hz	43 W	Safety class I
919406020831	BN310P LED70 /865 PSD- VLC MB L1150 WH	220 to 240 V	50 or 60 Hz	44 W	Safety class I
919406020841	BN310P LED92/830 PSU DA L1150 WH	220 to 240 V	50 or 60 Hz	56 W	Safety class I
919406020851	BN310P LED92/830 PSD- VLC DA L1150 WH	220 to 240 V	50 or 60 Hz	58 W	Safety class I
919406020891	BN310P LED160/865 PSD- VLC HRO L1700 WH	220 to 240 V	50 or 60 Hz	102 W	Safety class I
919406020901	BN310P LED92/865 PSU DA L1150 WH	220 to 240 V	50 or 60 Hz	56 W	Safety class I
919406020911	BN310P LED92/865 PSD- VLC DA L1150 WH	220 to 240 V	50 or 60 Hz	58 W	Safety class I
919406020951	BN310P LED70/865 PSU WB L1150 WH	220 to 240 V	50 or 60 Hz	43 W	Safety class I
919406020961	BN310P LED70/865 PSD-VLC WB L1150 WH	220 to 240 V	50 or 60 Hz	44 W	Safety class I
919406020981	BN310P LED70/840 PSU WB EL L1150 WH	220 to 240 V	50 or 60 Hz	44 W	Safety class I
919406020991	BN310P LED70/840 PSD-VLC WB EL L1150 WH	220 to 240 V	50 or 60 Hz	44 W	Safety class I
919406021001	BN310P LED70/830 PSU MB L1150 WH	220 to 240 V	50 or 60 Hz	43 W	Safety class I
919406021011	BN310P LED70/830 PSD-VLC MB L1150 WH	220 to 240 V	50 or 60 Hz	44 W	Safety class I
919406021021	BN310P LED70/830 PSU WB L1150 WH	220 to 240 V	50 or 60 Hz	43 W	Safety class I
919406021031	BN310P LED70/830 PSD-VLC WB L1150 WH	220 to 240 V	50 or 60 Hz	44 W	Safety class I
919406021041	BN310P LED92/865 PSU MB L1150 WH	220 to 240 V	50 or 60 Hz	56 W	Safety class I
919406021051	BN310P LED92/865 PSD-VLC MB L1150 WH	220 to 240 V	50 or 60 Hz	58 W	Safety class I
919406021061	BN310P LED92/865 PSU MB EL L1150 WH	220 to 240 V	50 or 60 Hz	56 W	Safety class I
919406021071	BN310P LED92/865 PSD-VLC MB EL L1150 WH	220 to 240 V	50 or 60 Hz	58 W	Safety class I
919406021081	BN310P LED92/865 PSU WB L1150 WH	220 to 240 V	50 or 60 Hz	56 W	Safety class I
919406021091	BN310P LED92/865 PSD-VLC WB L1150 WH	220 to 240 V	50 or 60 Hz	58 W	Safety class I
919406021101	BN310P LED92/865 PSU WB EL L1150 WH	220 to 240 V	50 or 60 Hz	56 W	Safety class I
919406021111	BN310P LED92/865 PSD WB EL L1150 WH	220 to 240 V	50 or 60 Hz	58 W	Safety class I
919406021121	BN310P LED92/865 PSU DA EL L1150 WH	220 to 240 V	50 or 60 Hz	56 W	Safety class I
919406021131	BN310P LED92/865 PSD-VLC DA EL L1150 WH	220 to 240 V	50 or 60 Hz	58 W	Safety class I
919406021151	BN310P LED92/840 PSD-VLC MB L1150 WH	220 to 240 V	50 or 60 Hz	58 W	Safety class I
919406021161	BN310P LED92/840 PSU MB EL L1150 WH	220 to 240 V	50 or 60 Hz	56 W	Safety class I
919406021171	BN310P LED92/840 PSD-VLC MB EL L1150 WH	220 to 240 V	50 or 60 Hz	58 W	Safety class I
919406021181	BN310P LED92/840 PSU WB EL L1150 WH	220 to 240 V	50 or 60 Hz	56 W	Safety class I
919406021191	BN310P LED92/840 PSU DA EL L1150 WH	220 to 240 V	50 or 60 Hz	56 W	Safety class I
919406021201	BN310P LED92/840 PSD-VLC DA EL L1150 WH	220 to 240 V	50 or 60 Hz	58 W	Safety class I
919406021221	BN310P LED92/830 PSD-VLC MB L1150 WH	220 to 240 V	50 or 60 Hz	58 W	Safety class I
919406021231	BN310P LED92/830 PSU MB EL L1150 WH	220 to 240 V	50 or 60 Hz	56 W	Safety class I

Order Code	Full Product Name	Input Voltage	Line Frequency	Power Consumption	Protection class IEC
919406021241	BN310P LED92/830 PSD-VLC MB EL L1150 WH	220 to 240 V	50 or 60 Hz	58 W	Safety class I
919406021251	BN310P LED92/830 PSU WB L1150 WH	220 to 240 V	50 or 60 Hz	56 W	Safety class I
919406021261	BN310P LED92/830 PSD-VLC WB L1150 WH	220 to 240 V	50 or 60 Hz	58 W	Safety class I
919406021271	BN310P LED92/830 PSU WB EL L1150 WH	220 to 240 V	50 or 60 Hz	56 W	Safety class I
919406021281	BN310P LED92/830 PSD-VLC WB EL L1150 WH	220 to 240 V	50 or 60 Hz	58 W	Safety class I
919406021291	BN310P LED92/830 PSU DA EL L1150 WH	220 to 240 V	50 or 60 Hz	56 W	Safety class I
919406021301	BN310P LED92/830 PSD-VLC DA EL L1150 WH	220 to 240 V	50 or 60 Hz	58 W	Safety class I
919406021351	BN310P LED160/865 PSD-VLC MB L1700 WH	220 to 240 V	50 or 60 Hz	102 W	Safety class I
919406021361	BN310P LED160/865 PSU MB EL L1700 WH	220 to 240 V	50 or 60 Hz	101 W	Safety class I
919406021371	BN310P LED160/865 PSD-VLC MB EL L1700 WH	220 to 240 V	50 or 60 Hz	102 W	Safety class I
919406021391	BN310P LED160/865 PSD-VLC WB L1700 WH	220 to 240 V	50 or 60 Hz	102 W	Safety class I
919406021401	BN310P LED160/865 PSU WB EL L1700 WH	220 to 240 V	50 or 60 Hz	101 W	Safety class I
919406021411	BN310P LED160/865 PSD-VLC WB EL L1700 WH	220 to 240 V	50 or 60 Hz	102 W	Safety class I
919406021421	BN310P LED160/865 PSU HRO EL L1700 WH	220 to 240 V	50 or 60 Hz	101 W	Safety class I
919406021431	BN310P LED160/865PSD-VLC HRO EL L1700 WH	220 to 240 V	50 or 60 Hz	102 W	Safety class I
919406021441	BN310P LED160/840 PSU MB L1700 WH	220 to 240 V	50 or 60 Hz	101 W	Safety class I
919406021451	BN310P LED160/840 PSD-VLC MB L1700 WH	220 to 240 V	50 or 60 Hz	102 W	Safety class I
919406021461	BN310P LED160/840 PSU MB EL L1700 WH	220 to 240 V	50 or 60 Hz	101 W	Safety class I
919406021471	BN310P LED160/840 PSD-VLC MB EL L1700 WH	220 to 240 V	50 or 60 Hz	102 W	Safety class I
919406021481	BN310P LED160/840 PSU WB EL L1700 WH	220 to 240 V	50 or 60 Hz	101 W	Safety class I
919406021491	BN310P LED160/840 PSD-VLC HRO L1700 WH	220 to 240 V	50 or 60 Hz	102 W	Safety class I
919406021501	BN310P LED160/840 PSU HRO EL L1700 WH	220 to 240 V	50 or 60 Hz	101 W	Safety class I
919406021511	BN310P LED160/840PSD-VLC HRO EL L1700 WH	220 to 240 V	50 or 60 Hz	102 W	Safety class I
919406021521	BN310P LED92/840 PSU DA L1150 WH	220 to 240 V	50 or 60 Hz	56 W	Safety class I
919406021531	BN310P LED92/840 PSD- VLC DA L1150 WH	220 to 240 V	50 or 60 Hz	58 W	Safety class I
919406021621	BN310P LED200/840 PSD- VLC WB L1700 WH	220 to 240 V	50 or 60 Hz	129 W	Safety class I
919406021631	BN310P LED200/840 PSD-VLC HRO L1700 WH	220 to 240 V	50 or 60 Hz	129 W	Safety class I
919406021641	BN310P LED200/840 PSD-VLC MB EL L1700 WH	220 to 240 V	50 or 60 Hz	129 W	Safety class I
919406021651	BN310P LED200/840 PSD-VLC MB L1700 WH	220 to 240 V	50 or 60 Hz	129 W	Safety class I
919406021661	BN310P LED200/840 PSU HRO EL L1700 WH	220 to 240 V	50 or 60 Hz	129 W	Safety class I
919406021671	BN310P LED200/840 PSU HRO L1700 WH	220 to 240 V	50 or 60 Hz	129 W	Safety class I
919406021681	BN310P LED200/840 PSU MB EL L1700 WH	220 to 240 V	50 or 60 Hz	129 W	Safety class I
919406021701	BN310P LED200/840 PSU WB EL L1700 WH	220 to 240 V	50 or 60 Hz	129 W	Safety class I
919406021721	BN310P LED200/840PSD-VLC WB EL L1700 WH	220 to 240 V	50 or 60 Hz	129 W	Safety class I
919406021731	BN310P LED200/840PSD-VLC HRO EL L1700WH	220 to 240 V	50 or 60 Hz	129 W	Safety class I
919406021741	BN310P LED200/865 PSD-V LC HRO L1700 WH	220 to 240 V	50 or 60 Hz	129 W	Safety class I
919406021751	BN310P LED200/865 PSD-VLC MB EL L1700 WH	220 to 240 V	50 or 60 Hz	129 W	Safety class I
919406021761	BN310P LED200/865 PSD-VLC MB L1700 WH	220 to 240 V	50 or 60 Hz	129 W	Safety class I
919406021771	BN310P LED200/865 PSD-VLC WB EL L1700 WH	220 to 240 V	50 or 60 Hz	129 W	Safety class I
919406021781	BN310P LED200/865 PSD-VLC WB L1700 WH	220 to 240 V	50 or 60 Hz	129 W	Safety class I
919406021791	BN310P LED200/865 PSU HRO EL L1700 WH	220 to 240 V	50 or 60 Hz	129 W	Safety class I
919406021811	BN310P LED200/865 PSU MB EL L1700 WH	220 to 240 V	50 or 60 Hz	129 W	Safety class I

Order Code	Full Product Name	Input Voltage	Line Frequency	Power Consumption	Protection class IEC
919406021821	BN310P LED200/865 PSU MB L1700 WH	220 to 240 V	50 or 60 Hz	129 W	Safety class I
919406021831	BN310P LED200/865 PSU WB EL L1700 WH	220 to 240 V	50 or 60 Hz	129 W	Safety class I
919406021841	BN310P LED200/865 PSU WB L1700 WH	220 to 240 V	50 or 60 Hz	129 W	Safety class I
919406021851	BN310P LED200/865PSD-VLC HRO EL L1700 WH	220 to 240 V	50 or 60 Hz	129 W	Safety class I
919406021861	BN310P LED70/840 WIA WB L1150 WH	220 to 240 V	50 or 60 Hz	44 W	Safety class I
919406021881	BN310P LED70/865 WIA WB L1150 WH	220 to 240 V	50 or 60 Hz	44 W	Safety class I
919406021891	BN310P LED70/865 WIA MB L1150 WH	220 to 240 V	50 or 60 Hz	44 W	Safety class I
919406022101	BN310P LED230/840 PSD- VLC WB L1700 WH	220 to 240 V	50 or 60 Hz	153 W	Safety class I
919406022111	BN310P LED230/840 PSD-VLC HRO L1700 WH	220 to 240 V	50 or 60 Hz	153 W	Safety class I
919406022121	BN310P LED230/840 PSD-VLC MB L1700 WH	220 to 240 V	50 or 60 Hz	153 W	Safety class I
820619284281	BN310P LED92/865 PSU MB L1150 BK	220 to 240 V	50 or 60 Hz	56 W	Safety class I
820619284431	BN310P LED92/830 PSU MB L1150 BK	220 to 240 V	50 or 60 Hz	56 W	Safety class I
820619284681	BN310P LED70/840 PSU WB L1150 BK	220 to 240 V	50 or 60 Hz	43 W	Safety class I
820619284691	BN310P LED70/840 PSU WB EL L1150 BK	220 to 240 V	50 or 60 Hz	43 W	Safety class I
820619284701	BN310P LED70/830 PSU MB L1150 BK	220 to 240 V	50 or 60 Hz	43 W	Safety class I
919406020861	BN310P LED92/840 PSU DA L1150 BK	220 to 240 V	50 or 60 Hz	56 W	Safety class I
919406020871	BN310P LED92/840 PSD- VLC DA L1150 BK	220 to 240 V	50 or 60 Hz	58 W	Safety class I
919406020941	BN310P LED92/840 PSU WB L1150 BK	220 to 240 V	50 or 60 Hz	56 W	Safety class I
919406021311	BN310P LED92/840 PSD-VLC WB L1150 BK	220 to 240 V	50 or 60 Hz	58 W	Safety class I
919406021321	BN310P LED92/840 PSU WB EL L1150 BK	220 to 240 V	50 or 60 Hz	56 W	Safety class I
919406021331	BN310P LED92/840 PSD-VLC WB EL L1150 BK	220 to 240 V	50 or 60 Hz	58 W	Safety class I
919506310591	BN310P Xitanium 100W Driver Spare Part	220 to 240 V	- Hz	100 W	Safety class I
919506310621	KIT 10x BN310P Bracket White Spare Parts	- V	- Hz	0 W	-
919506310631	BN310P Bracket Black Spare Part	- V	- Hz	0 W	-
919506310601	BN310P CertaDriver 44W Spare Part 5 PCES	220 to 240 V	- Hz	44 W	Safety class I
919506310611	BN310P CertaDriver 65W Spare Part 5 PCES	220 to 240 V	- Hz	65 W	Safety class I

Controls and Dimming

Order Code	Full Product Name	Dimmable	Maximum dim level
919406021901	BN310P LED92/840 SRD H4 WB L1150 WH	Wireless Dim	Programmable
919406021911	BN310P LED92/840 SRD H4 MB L1150 WH	Wireless Dim	Programmable
919406021921	BN310P LED92/840 SRD H4 HRO L1150 WH	Wireless Dim	Programmable
919406021931	BN310P LED92/840 SRD H4 DA L1150 WH	Wireless Dim	Programmable
919406021941	BN310P LED92/865 SRD H4 WB L1150 WH	Wireless Dim	Programmable
919406021951	BN310P LED92/865 SRD H4 MB L1150 WH	Wireless Dim	Programmable
919406021961	BN310P LED92/865 SRD H4 HRO L1150 WH	Wireless Dim	Programmable
919406021971	BN310P LED92/865 SRD H4 DA L1150 WH	Wireless Dim	Programmable
919406021981	BN310P LED160/840 SRD H4 WB L1700 WH	Wireless Dim	Programmable
919406021991	BN310P LED160/840 SRD H4 MB L1700 WH	Wireless Dim	Programmable
919406022001	BN310P LED160/840 SRD H4 HRO L1700 WH	Wireless Dim	Programmable
919406022011	BN310P LED160/865 SRD H4 WB L1700 WH	Wireless Dim	Programmable
919406022041	BN310P LED200/840 SRD H4 WB L1700 WH	Wireless Dim	Programmable

Order Code	Full Product Name	Dimmable	Maximum dim level
919406022051	BN310P LED200/840 SRD H4 MB L1700 WH	Wireless Dim	Programmable
919406022061	BN310P LED200/840 SRD H4 HRO L1700 WH	Wireless Dim	Programmable
919406022071	BN310P LED200/865 SRD H4 WB L1700 WH	Wireless Dim	Programmable
919406022081	BN310P LED200/865 SRD H4 MB L1700 WH	Wireless Dim	Programmable
919406022091	BN310P LED200/865 SRD H4 HRO L1700 WH	Wireless Dim	Programmable
919506310581	BN310P Xitanium 60W Driver Spare Part	Yes	-
820619284351	BN310P LED92/840 PSU HRO L1150 WH	No	Not applicable
820619284711	BN310P LED160/850 PSU WB L1700 WH	No	Not applicable
820619284721	BN310P LED160/850 PSU HRO L1700 WH	No	Not applicable
820619284731	BN310P LED160/850 PSU MB L1700 WH	No	Not applicable
820619284781	BN310P LED130/850 PSU HRO L1700 WH	No	Not applicable
820619284791	BN310P LED130/850 PSU MB L1700 WH	No	Not applicable
820619284801	BN310P LED130/850 PSU WB L1700 WH	No	Not applicable
919406020751	BN310P LED70/840 PSD- VLC WB L1150 WH	Yes	1%
919406020771	BN310P LED92/840 PSD- VLC WB L1150 WH	Yes	1%
919406020781	BN310P LED92/840 PSD- VLC WB EL L1150 WH	Yes	1%
919406020811	BN310P LED160/840PSD- VLC WB EL L1700 WH	Yes	1%
919406020821	BN310P LED70/865 PSU MB L1150 WH	No	Not applicable
919406020831	BN310P LED70 /865 PSD- VLC MB L1150 WH	Yes	1%
919406020841	BN310P LED92/830 PSU DA L1150 WH	No	Not applicable
919406020851	BN310P LED92/830 PSD- VLC DA L1150 WH	Yes	1%
919406020891	BN310P LED160/865 PSD- VLC HRO L1700 WH	Yes	1%
919406020901	BN310P LED92/865 PSU DA L1150 WH	No	Not applicable
919406020911	BN310P LED92/865 PSD- VLC DA L1150 WH	Yes	1%
919406020951	BN310P LED70/865 PSU WB L1150 WH	No	Not applicable
919406020961	BN310P LED70/865 PSD-VLC WB L1150 WH	Yes	1%
919406020981	BN310P LED70/840 PSU WB EL L1150 WH	No	Not applicable
919406020991	BN310P LED70/840 PSD-VLC WB EL L1150 WH	Yes	1%
919406021001	BN310P LED70/830 PSU MB L1150 WH	No	Not applicable
919406021011	BN310P LED70/830 PSD-VLC MB L1150 WH	Yes	1%
919406021021	BN310P LED70/830 PSU WB L1150 WH	No	Not applicable
919406021031	BN310P LED70/830 PSD-VLC WB L1150 WH	Yes	1%
919406021041	BN310P LED92/865 PSU MB L1150 WH	No	Not applicable
919406021051	BN310P LED92/865 PSD-VLC MB L1150 WH	Yes	1%
919406021061	BN310P LED92/865 PSU MB EL L1150 WH	No	Not applicable
919406021071	BN310P LED92/865 PSD-VLC MB EL L1150 WH	Yes	1%
919406021081	BN310P LED92/865 PSU WB L1150 WH	No	Not applicable
919406021091	BN310P LED92/865 PSD-VLC WB L1150 WH	Yes	1%
919406021101	BN310P LED92/865 PSU WB EL L1150 WH	No	Not applicable
919406021111	BN310P LED92/865 PSD WB EL L1150 WH	Yes	1%
919406021121	BN310P LED92/865 PSU DA EL L1150 WH	No	Not applicable
919406021131	BN310P LED92/865 PSD-VLC DA EL L1150 WH	Yes	1%

Order Code	Full Product Name	Dimmable	Maximum dim level
919406021151	BN310P LED92/840 PSD-VLC MB L1150 WH	Yes	1%
919406021161	BN310P LED92/840 PSU MB EL L1150 WH	No	Not applicable
919406021171	BN310P LED92/840 PSD-VLC MB EL L1150 WH	Yes	1%
919406021181	BN310P LED92/840 PSU WB EL L1150 WH	No	Not applicable
919406021191	BN310P LED92/840 PSU DA EL L1150 WH	No	Not applicable
919406021201	BN310P LED92/840 PSD-VLC DA EL L1150 WH	Yes	1%
919406021221	BN310P LED92/830 PSD-VLC MB L1150 WH	Yes	1%
919406021231	BN310P LED92/830 PSU MB EL L1150 WH	No	Not applicable
919406021241	BN310P LED92/830 PSD-VLC MB EL L1150 WH	Yes	1%
919406021251	BN310P LED92/830 PSU WB L1150 WH	No	Not applicable
919406021261	BN310P LED92/830 PSD-VLC WB L1150 WH	Yes	1%
919406021271	BN310P LED92/830 PSU WB EL L1150 WH	No	Not applicable
919406021281	BN310P LED92/830 PSD-VLC WB EL L1150 WH	Yes	1%
919406021291	BN310P LED92/830 PSU DA EL L1150 WH	No	Not applicable
919406021301	BN310P LED92/830 PSD-VLC DA EL L1150 WH	Yes	1%
919406021351	BN310P LED160/865 PSD-VLC MB L1700 WH	Yes	1%
919406021361	BN310P LED160/865 PSU MB EL L1700 WH	No	Not applicable
919406021371	BN310P LED160/865 PSD-VLC MB EL L1700 WH	Yes	1%
919406021391	BN310P LED160/865 PSD-VLC WB L1700 WH	Yes	1%
919406021401	BN310P LED160/865 PSU WB EL L1700 WH	No	Not applicable
919406021411	BN310P LED160/865 PSD-VLC WB EL L1700 WH	Yes	1%
919406021421	BN310P LED160/865 PSU HRO EL L1700 WH	No	Not applicable
919406021431	BN310P LED160/865PSD-VLC HRO EL L1700 WH	Yes	1%
919406021441	BN310P LED160/840 PSU MB L1700 WH	No	Not applicable
919406021451	BN310P LED160/840 PSD-VLC MB L1700 WH	Yes	1%
919406021461	BN310P LED160/840 PSU MB EL L1700 WH	No	Not applicable
919406021471	BN310P LED160/840 PSD-VLC MB EL L1700 WH	Yes	1%
919406021481	BN310P LED160/840 PSU WB EL L1700 WH	No	Not applicable
919406021491	BN310P LED160/840 PSD-VLC HRO L1700 WH	Yes	1%
919406021501	BN310P LED160/840 PSU HRO EL L1700 WH	No	Not applicable
919406021511	BN310P LED160/840PSD-VLC HRO EL L1700 WH	Yes	1%
919406021521	BN310P LED92/840 PSU DA L1150 WH	No	Not applicable
919406021531	BN310P LED92/840 PSD- VLC DA L1150 WH	Yes	1%
919406021621	BN310P LED200/840 PSD- VLC WB L1700 WH	Yes	1%
919406021631	BN310P LED200/840 PSD-VLC HRO L1700 WH	Yes	1%
919406021641	BN310P LED200/840 PSD-VLC MB EL L1700 WH	Yes	1%
919406021651	BN310P LED200/840 PSD-VLC MB L1700 WH	Yes	1%
919406021661	BN310P LED200/840 PSU HRO EL L1700 WH	No	Not applicable
919406021671	BN310P LED200/840 PSU HRO L1700 WH	No	Not applicable
919406021681	BN310P LED200/840 PSU MB EL L1700 WH	No	Not applicable
919406021701	BN310P LED200/840 PSU WB EL L1700 WH	No	Not applicable
919406021721	BN310P LED200/840PSD-VLC WB EL L1700 WH	Yes	1%

Order Code	Full Product Name	Dimmable	Maximum dim level
919406021731	BN310P LED200/840PSD-VLC HRO EL L1700WH	Yes	1%
919406021741	BN310P LED200/865 PSD-V LC HRO L1700 WH	Yes	1%
919406021751	BN310P LED200/865 PSD-VLC MB EL L1700 WH	Yes	1%
919406021761	BN310P LED200/865 PSD-VLC MB L1700 WH	Yes	1%
919406021771	BN310P LED200/865 PSD-VLC WB EL L1700 WH	Yes	1%
919406021781	BN310P LED200/865 PSD-VLC WB L1700 WH	Yes	1%
919406021791	BN310P LED200/865 PSU HRO EL L1700 WH	No	Not applicable
919406021811	BN310P LED200/865 PSU MB EL L1700 WH	No	Not applicable
919406021821	BN310P LED200/865 PSU MB L1700 WH	No	Not applicable
919406021831	BN310P LED200/865 PSU WB EL L1700 WH	No	Not applicable
919406021841	BN310P LED200/865 PSU WB L1700 WH	No	Not applicable
919406021851	BN310P LED200/865PSD-VLC HRO EL L1700 WH	Yes	1%
919406021861	BN310P LED70/840 WIA WB L1150 WH	Wireless Dim	Programmable
919406021881	BN310P LED70/865 WIA WB L1150 WH	Wireless Dim	Programmable
919406021891	BN310P LED70/865 WIA MB L1150 WH	Wireless Dim	Programmable
919406022101	BN310P LED230/840 PSD- VLC WB L1700 WH	Yes	1%
919406022111	BN310P LED230/840 PSD-VLC HRO L1700 WH	Yes	1%
919406022121	BN310P LED230/840 PSD-VLC MB L1700 WH	Yes	1%
820619284281	BN310P LED92/865 PSU MB L1150 BK	No	Not applicable
820619284431	BN310P LED92/830 PSU MB L1150 BK	No	Not applicable
820619284681	BN310P LED70/840 PSU WB L1150 BK	No	Not applicable
820619284691	BN310P LED70/840 PSU WB EL L1150 BK	No	Not applicable
820619284701	BN310P LED70/830 PSU MB L1150 BK	No	Not applicable
919406020861	BN310P LED92/840 PSU DA L1150 BK	No	Not applicable
919406020871	BN310P LED92/840 PSD- VLC DA L1150 BK	Yes	1%
919406020941	BN310P LED92/840 PSU WB L1150 BK	No	Not applicable
919406021311	BN310P LED92/840 PSD-VLC WB L1150 BK	Yes	1%
919406021321	BN310P LED92/840 PSU WB EL L1150 BK	No	Not applicable
919406021331	BN310P LED92/840 PSD-VLC WB EL L1150 BK	Yes	1%
919506310591	BN310P Xitanium 100W Driver Spare Part	Yes	-
919506310621	KIT 10x BN310P Bracket White Spare Parts	No	-
919506310631	BN310P Bracket Black Spare Part	No	-
919506310601	BN310P CertaDriver 44W Spare Part 5 PCES	No	-
919506310611	BN310P CertaDriver 65W Spare Part 5 PCES	No	-

Mechanical and Housing

Order Code	Full Product Name	Housing Color	Ingress protection code
919406021901	BN310P LED92/840 SRD H4 WB L1150 WH	White	IP20
919406021911	BN310P LED92/840 SRD H4 MB L1150 WH	White	IP20
919406021921	BN310P LED92/840 SRD H4 HRO L1150 WH	White	IP20
919406021931	BN310P LED92/840 SRD H4 DA L1150 WH	White	IP20
919406021941	BN310P LED92/865 SRD H4 WB L1150 WH	White	IP20

Order Code	Full Product Name	Housing Color	Ingress protection code
919406021951	BN310P LED92/865 SRD H4 MB L1150 WH	White	IP20
919406021961	BN310P LED92/865 SRD H4 HRO L1150 WH	White	IP20
919406021971	BN310P LED92/865 SRD H4 DA L1150 WH	White	IP20
919406021981	BN310P LED160/840 SRD H4 WB L1700 WH	White	IP20
919406021991	BN310P LED160/840 SRD H4 MB L1700 WH	White	IP20
919406022001	BN310P LED160/840 SRD H4 HRO L1700 WH	White	IP20
919406022011	BN310P LED160/865 SRD H4 WB L1700 WH	White	IP20
919406022041	BN310P LED200/840 SRD H4 WB L1700 WH	White	IP20
919406022051	BN310P LED200/840 SRD H4 MB L1700 WH	White	IP20
919406022061	BN310P LED200/840 SRD H4 HRO L1700 WH	White	IP20
919406022071	BN310P LED200/865 SRD H4 WB L1700 WH	White	IP20
919406022081	BN310P LED200/865 SRD H4 MB L1700 WH	White	IP20
919406022091	BN310P LED200/865 SRD H4 HRO L1700 WH	White	IP20
919506310581	BN310P Xitanium 60W Driver Spare Part	White	IP20
820619284351	BN310P LED92/840 PSU HRO L1150 WH	White	IP20
820619284711	BN310P LED160/850 PSU WB L1700 WH	White	IP20
820619284721	BN310P LED160/850 PSU HRO L1700 WH	White	IP20
820619284731	BN310P LED160/850 PSU MB L1700 WH	White	IP20
820619284781	BN310P LED130/850 PSU HRO L1700 WH	White	IP20
820619284791	BN310P LED130/850 PSU MB L1700 WH	White	IP20
820619284801	BN310P LED130/850 PSU WB L1700 WH	White	IP20
919406020751	BN310P LED70/840 PSD- VLC WB L1150 WH	White	IP20
919406020771	BN310P LED92/840 PSD- VLC WB L1150 WH	White	IP20
919406020781	BN310P LED92/840 PSD- VLC WB EL L1150 WH	White	IP23
919406020811	BN310P LED160/840PSD- VLC WB EL L1700 WH	White	IP20
919406020821	BN310P LED70/865 PSU MB L1150 WH	White	IP20
919406020831	BN310P LED70 /865 PSD- VLC MB L1150 WH	White	IP20
919406020841	BN310P LED92/830 PSU DA L1150 WH	White	IP20
919406020851	BN310P LED92/830 PSD- VLC DA L1150 WH	White	IP20
919406020891	BN310P LED160/865 PSD- VLC HRO L1700 WH	White	IP20
919406020901	BN310P LED92/865 PSU DA L1150 WH	White	IP20
919406020911	BN310P LED92/865 PSD- VLC DA L1150 WH	White	IP20
919406020951	BN310P LED70/865 PSU WB L1150 WH	White	IP20
919406020961	BN310P LED70/865 PSD-VLC WB L1150 WH	White	IP20
919406020981	BN310P LED70/840 PSU WB EL L1150 WH	White	IP23
919406020991	BN310P LED70/840 PSD-VLC WB EL L1150 WH	White	IP23
919406021001	BN310P LED70/830 PSU MB L1150 WH	White	IP20
919406021011	BN310P LED70/830 PSD-VLC MB L1150 WH	White	IP20
919406021021	BN310P LED70/830 PSU WB L1150 WH	White	IP20
919406021031	BN310P LED70/830 PSD-VLC WB L1150 WH	White	IP20
919406021041	BN310P LED92/865 PSU MB L1150 WH	White	IP20
919406021051	BN310P LED92/865 PSD-VLC MB L1150 WH	White	IP20

Order Code	Full Product Name	Housing Color	Ingress protection code
919406021061	BN310P LED92/865 PSU MB EL L1150 WH	White	IP23
919406021071	BN310P LED92/865 PSD-VLC MB EL L1150 WH	White	IP23
919406021081	BN310P LED92/865 PSU WB L1150 WH	White	IP20
919406021091	BN310P LED92/865 PSD-VLC WB L1150 WH	White	IP20
919406021101	BN310P LED92/865 PSU WB EL L1150 WH	White	IP23
919406021111	BN310P LED92/865 PSD WB EL L1150 WH	White	IP23
919406021121	BN310P LED92/865 PSU DA EL L1150 WH	White	IP23
919406021131	BN310P LED92/865 PSD-VLC DA EL L1150 WH	White	IP23
919406021151	BN310P LED92/840 PSD-VLC MB L1150 WH	White	IP20
919406021161	BN310P LED92/840 PSU MB EL L1150 WH	White	IP23
919406021171	BN310P LED92/840 PSD-VLC MB EL L1150 WH	White	IP23
919406021181	BN310P LED92/840 PSU WB EL L1150 WH	White	IP23
919406021191	BN310P LED92/840 PSU DA EL L1150 WH	White	IP23
919406021201	BN310P LED92/840 PSD-VLC DA EL L1150 WH	White	IP23
919406021221	BN310P LED92/830 PSD-VLC MB L1150 WH	White	IP20
919406021231	BN310P LED92/830 PSU MB EL L1150 WH	White	IP23
919406021241	BN310P LED92/830 PSD-VLC MB EL L1150 WH	White	IP23
919406021251	BN310P LED92/830 PSU WB L1150 WH	White	IP20
919406021261	BN310P LED92/830 PSD-VLC WB L1150 WH	White	IP20
919406021271	BN310P LED92/830 PSU WB EL L1150 WH	White	IP23
919406021281	BN310P LED92/830 PSD-VLC WB EL L1150 WH	White	IP23
919406021291	BN310P LED92/830 PSU DA EL L1150 WH	White	IP23
919406021301	BN310P LED92/830 PSD-VLC DA EL L1150 WH	White	IP23
919406021351	BN310P LED160/865 PSD-VLC MB L1700 WH	White	IP20
919406021361	BN310P LED160/865 PSU MB EL L1700 WH	White	IP23
919406021371	BN310P LED160/865 PSD-VLC MB EL L1700 WH	White	IP23
919406021391	BN310P LED160/865 PSD-VLC WB L1700 WH	White	IP20
919406021401	BN310P LED160/865 PSU WB EL L1700 WH	White	IP23
919406021411	BN310P LED160/865 PSD-VLC WB EL L1700 WH	White	IP23
919406021421	BN310P LED160/865 PSU HRO EL L1700 WH	White	IP23
919406021431	BN310P LED160/865PSD-VLC HRO EL L1700 WH	White	IP23
919406021441	BN310P LED160/840 PSU MB L1700 WH	White	IP20
919406021451	BN310P LED160/840 PSD-VLC MB L1700 WH	White	IP20
919406021461	BN310P LED160/840 PSU MB EL L1700 WH	White	IP23
919406021471	BN310P LED160/840 PSD-VLC MB EL L1700 WH	White	IP23
919406021481	BN310P LED160/840 PSU WB EL L1700 WH	White	IP23
919406021491	BN310P LED160/840 PSD-VLC HRO L1700 WH	White	IP20
919406021501	BN310P LED160/840 PSU HRO EL L1700 WH	White	IP23
919406021511	BN310P LED160/840PSD-VLC HRO EL L1700 WH	White	IP23
919406021521	BN310P LED92/840 PSU DA L1150 WH	White	IP20
919406021531	BN310P LED92/840 PSD- VLC DA L1150 WH	White	IP20
919406021621	BN310P LED200/840 PSD- VLC WB L1700 WH	White	IP20

Order Code	Full Product Name	Housing Color	Ingress protection code
919406021631	BN310P LED200/840 PSD-VLC HRO L1700 WH	White	IP20
919406021641	BN310P LED200/840 PSD-VLC MB EL L1700 WH	White	IP23
919406021651	BN310P LED200/840 PSD-VLC MB L1700 WH	White	IP20
919406021661	BN310P LED200/840 PSU HRO EL L1700 WH	White	IP23
919406021671	BN310P LED200/840 PSU HRO L1700 WH	White	IP20
919406021681	BN310P LED200/840 PSU MB EL L1700 WH	White	IP23
919406021701	BN310P LED200/840 PSU WB EL L1700 WH	White	IP23
919406021721	BN310P LED200/840PSD-VLC WB EL L1700 WH	White	IP23
919406021731	BN310P LED200/840PSD-VLC HRO EL L1700WH	White	IP23
919406021741	BN310P LED200/865 PSD-V LC HRO L1700 WH	White	IP20
919406021751	BN310P LED200/865 PSD-VLC MB EL L1700 WH	White	IP23
919406021761	BN310P LED200/865 PSD-VLC MB L1700 WH	White	IP20
919406021771	BN310P LED200/865 PSD-VLC WB EL L1700 WH	White	IP23
919406021781	BN310P LED200/865 PSD-VLC WB L1700 WH	White	IP20
919406021791	BN310P LED200/865 PSU HRO EL L1700 WH	White	IP23
919406021811	BN310P LED200/865 PSU MB EL L1700 WH	White	IP23
919406021821	BN310P LED200/865 PSU MB L1700 WH	White	IP20
919406021831	BN310P LED200/865 PSU WB EL L1700 WH	White	IP23
919406021841	BN310P LED200/865 PSU WB L1700 WH	White	IP20
919406021851	BN310P LED200/865PSD-VLC HRO EL L1700 WH	White	IP23
919406021861	BN310P LED70/840 WIA WB L1150 WH	White	IP20
919406021881	BN310P LED70/865 WIA WB L1150 WH	White	IP20
919406021891	BN310P LED70/865 WIA MB L1150 WH	White	IP20
919406022101	BN310P LED230/840 PSD- VLC WB L1700 WH	White	IP20
919406022111	BN310P LED230/840 PSD-VLC HRO L1700 WH	White	IP20
919406022121	BN310P LED230/840 PSD-VLC MB L1700 WH	White	IP20
820619284281	BN310P LED92/865 PSU MB L1150 BK	Black	IP20
820619284431	BN310P LED92/830 PSU MB L1150 BK	Black	IP20
820619284681	BN310P LED70/840 PSU WB L1150 BK	Black	IP20
820619284691	BN310P LED70/840 PSU WB EL L1150 BK	Black	IP23
820619284701	BN310P LED70/830 PSU MB L1150 BK	Black	IP20
919406020861	BN310P LED92/840 PSU DA L1150 BK	Black	IP20
919406020871	BN310P LED92/840 PSD- VLC DA L1150 BK	Black	IP20
919406020941	BN310P LED92/840 PSU WB L1150 BK	Black	IP20
919406021311	BN310P LED92/840 PSD-VLC WB L1150 BK	Black	IP20
919406021321	BN310P LED92/840 PSU WB EL L1150 BK	Black	IP23
919406021331	BN310P LED92/840 PSD-VLC WB EL L1150 BK	Black	IP23
919506310591	BN310P Xitanium 100W Driver Spare Part	White	IP20
919506310621	KIT 10x BN310P Bracket White Spare Parts	White	-
919506310631	BN310P Bracket Black Spare Part	Black	-
919506310601	BN310P CertaDriver 44W Spare Part 5 PCES	White	IP20
919506310611	BN310P CertaDriver 65W Spare Part 5 PCES	White	IP20

Approval and Application

Order Code	Full Product Name	Ambient temperature range
919406021901	BN310P LED92/840 SRD H4 WB L1150 WH	-20 to +45 °C
919406021911	BN310P LED92/840 SRD H4 MB L1150 WH	-20 to +45 °C
919406021921	BN310P LED92/840 SRD H4 HRO L1150 WH	-20 to +45 °C
919406021931	BN310P LED92/840 SRD H4 DA L1150 WH	-20 to +45 °C
919406021941	BN310P LED92/865 SRD H4 WB L1150 WH	-20 to +45 °C
919406021951	BN310P LED92/865 SRD H4 MB L1150 WH	-20 to +45 °C
919406021961	BN310P LED92/865 SRD H4 HRO L1150 WH	-20 to +45 °C
919406021971	BN310P LED92/865 SRD H4 DA L1150 WH	-20 to +45 °C
919406021981	BN310P LED160/840 SRD H4 WB L1700 WH	-20 to +45 °C
919406021991	BN310P LED160/840 SRD H4 MB L1700 WH	-20 to +45 °C
919406022001	BN310P LED160/840 SRD H4 HRO L1700 WH	-20 to +45 °C
919406022011	BN310P LED160/865 SRD H4 WB L1700 WH	-20 to +45 °C
919406022041	BN310P LED200/840 SRD H4 WB L1700 WH	-20 to +45 °C
919406022051	BN310P LED200/840 SRD H4 MB L1700 WH	-20 to +45 °C
919406022061	BN310P LED200/840 SRD H4 HRO L1700 WH	-20 to +45 °C
919406022071	BN310P LED200/865 SRD H4 WB L1700 WH	-20 to +45 °C
919406022081	BN310P LED200/865 SRD H4 MB L1700 WH	-20 to +45 °C
919406022091	BN310P LED200/865 SRD H4 HRO L1700 WH	-20 to +45 °C
919506310581	BN310P Xitanium 60W Driver Spare Part	-20 to +45 °C
820619284351	BN310P LED92/840 PSU HRO L1150 WH	-20 to +45 °C
820619284711	BN310P LED160/850 PSU WB L1700 WH	-20 to +45 °C
820619284721	BN310P LED160/850 PSU HRO L1700 WH	-20 to +45 °C
820619284731	BN310P LED160/850 PSU MB L1700 WH	-20 to +45 °C
820619284781	BN310P LED130/850 PSU HRO L1700 WH	-20 to +45 °C
820619284791	BN310P LED130/850 PSU MB L1700 WH	-20 to +45 °C
820619284801	BN310P LED130/850 PSU WB L1700 WH	-20 to +45 °C
919406020751	BN310P LED70/840 PSD- VLC WB L1150 WH	-20 to +35 °C
919406020771	BN310P LED92/840 PSD- VLC WB L1150 WH	-20 to +35 °C
919406020781	BN310P LED92/840 PSD- VLC WB EL L1150 WH	-20 to +35 °C
919406020811	BN310P LED160/840PSD- VLC WB EL L1700 WH	-20 to +35 °C
919406020821	BN310P LED70/865 PSU MB L1150 WH	-20 to +35 °C
919406020831	BN310P LED70 /865 PSD- VLC MB L1150 WH	-20 to +35 °C
919406020841	BN310P LED92/830 PSU DA L1150 WH	-20 to +35 °C
919406020851	BN310P LED92/830 PSD- VLC DA L1150 WH	-20 to +35 °C
919406020891	BN310P LED160/865 PSD- VLC HRO L1700 WH	-20 to +35 °C
919406020901	BN310P LED92/865 PSU DA L1150 WH	-20 to +35 °C
919406020911	BN310P LED92/865 PSD- VLC DA L1150 WH	-20 to +35 °C
919406020951	BN310P LED70/865 PSU WB L1150 WH	-20 to +35 °C
919406020961	BN310P LED70/865 PSD-VLC WB L1150 WH	-20 to +35 °C
919406020981	BN310P LED70/840 PSU WB EL L1150 WH	-20 to +35 °C
919406020991	BN310P LED70/840 PSD-VLC WB EL L1150 WH	-20 to +35 °C

Order Code	Full Product Name	Ambient temperature range
919406021001	BN310P LED70/830 PSU MB L1150 WH	-20 to +35 °C
919406021011	BN310P LED70/830 PSD-VLC MB L1150 WH	-20 to +35 °C
919406021021	BN310P LED70/830 PSU WB L1150 WH	-20 to +35 °C
919406021031	BN310P LED70/830 PSD-VLC WB L1150 WH	-20 to +35 °C
919406021041	BN310P LED92/865 PSU MB L1150 WH	-20 to +35 °C
919406021051	BN310P LED92/865 PSD-VLC MB L1150 WH	-20 to +35 °C
919406021061	BN310P LED92/865 PSU MB EL L1150 WH	-20 to +35 °C
919406021071	BN310P LED92/865 PSD-VLC MB EL L1150 WH	-20 to +35 °C
919406021081	BN310P LED92/865 PSU WB L1150 WH	-20 to +35 °C
919406021091	BN310P LED92/865 PSD-VLC WB L1150 WH	-20 to +35 °C
919406021101	BN310P LED92/865 PSU WB EL L1150 WH	-20 to +35 °C
919406021111	BN310P LED92/865 PSD WB EL L1150 WH	-20 to +35 °C
919406021121	BN310P LED92/865 PSU DA EL L1150 WH	-20 to +35 °C
919406021131	BN310P LED92/865 PSD-VLC DA EL L1150 WH	-20 to +35 °C
919406021151	BN310P LED92/840 PSD-VLC MB L1150 WH	-20 to +35 °C
919406021161	BN310P LED92/840 PSU MB EL L1150 WH	-20 to +35 °C
919406021171	BN310P LED92/840 PSD-VLC MB EL L1150 WH	-20 to +35 °C
919406021181	BN310P LED92/840 PSU WB EL L1150 WH	-20 to +35 °C
919406021191	BN310P LED92/840 PSU DA EL L1150 WH	-20 to +35 °C
919406021201	BN310P LED92/840 PSD-VLC DA EL L1150 WH	-20 to +35 °C
919406021221	BN310P LED92/830 PSD-VLC MB L1150 WH	-20 to +35 °C
919406021231	BN310P LED92/830 PSU MB EL L1150 WH	-20 to +35 °C
919406021241	BN310P LED92/830 PSD-VLC MB EL L1150 WH	-20 to +35 °C
919406021251	BN310P LED92/830 PSU WB L1150 WH	-20 to +35 °C
919406021261	BN310P LED92/830 PSD-VLC WB L1150 WH	-20 to +35 °C
919406021271	BN310P LED92/830 PSU WB EL L1150 WH	-20 to +35 °C
919406021281	BN310P LED92/830 PSD-VLC WB EL L1150 WH	-20 to +35 °C
919406021291	BN310P LED92/830 PSU DA EL L1150 WH	-20 to +35 °C
919406021301	BN310P LED92/830 PSD-VLC DA EL L1150 WH	-20 to +35 °C
919406021351	BN310P LED160/865 PSD-VLC MB L1700 WH	-20 to +35 °C
919406021361	BN310P LED160/865 PSU MB EL L1700 WH	-20 to +35 °C
919406021371	BN310P LED160/865 PSD-VLC MB EL L1700 WH	-20 to +35 °C
919406021391	BN310P LED160/865 PSD-VLC WB L1700 WH	-20 to +35 °C
919406021401	BN310P LED160/865 PSU WB EL L1700 WH	-20 to +35 °C
919406021411	BN310P LED160/865 PSD-VLC WB EL L1700 WH	-20 to +35 °C
919406021421	BN310P LED160/865 PSU HRO EL L1700 WH	-20 to +35 °C
919406021431	BN310P LED160/865PSD-VLC HRO EL L1700 WH	-20 to +35 °C
919406021441	BN310P LED160/840 PSU MB L1700 WH	-20 to +35 °C
919406021451	BN310P LED160/840 PSD-VLC MB L1700 WH	-20 to +35 °C
919406021461	BN310P LED160/840 PSU MB EL L1700 WH	-20 to +35 °C
919406021471	BN310P LED160/840 PSD-VLC MB EL L1700 WH	-20 to +35 °C
919406021481	BN310P LED160/840 PSU WB EL L1700 WH	-20 to +35 °C

Order Code	Full Product Name	Ambient temperature range
919406021491	BN310P LED160/840 PSD-VLC HRO L1700 WH	-20 to +35 °C
919406021501	BN310P LED160/840 PSU HRO EL L1700 WH	-20 to +35 °C
919406021511	BN310P LED160/840PSD-VLC HRO EL L1700 WH	-20 to +35 °C
919406021521	BN310P LED92/840 PSU DA L1150 WH	-20 to +35 °C
919406021531	BN310P LED92/840 PSD- VLC DA L1150 WH	-20 to +35 °C
919406021621	BN310P LED200/840 PSD- VLC WB L1700 WH	-20 to +45 °C
919406021631	BN310P LED200/840 PSD-VLC HRO L1700 WH	-20 to +45 °C
919406021641	BN310P LED200/840 PSD-VLC MB EL L1700 WH	-20 to +45 °C
919406021651	BN310P LED200/840 PSD-VLC MB L1700 WH	-20 to +45 °C
919406021661	BN310P LED200/840 PSU HRO EL L1700 WH	-20 to +45 °C
919406021671	BN310P LED200/840 PSU HRO L1700 WH	-20 to +45 °C
919406021681	BN310P LED200/840 PSU MB EL L1700 WH	-20 to +45 °C
919406021701	BN310P LED200/840 PSU WB EL L1700 WH	-20 to +45 °C
919406021721	BN310P LED200/840PSD-VLC WB EL L1700 WH	-20 to +45 °C
919406021731	BN310P LED200/840PSD-VLC HRO EL L1700WH	-20 to +45 °C
919406021741	BN310P LED200/865 PSD-V LC HRO L1700 WH	-20 to +45 °C
919406021751	BN310P LED200/865 PSD-VLC MB EL L1700 WH	-20 to +45 °C
919406021761	BN310P LED200/865 PSD-VLC MB L1700 WH	-20 to +45 °C
919406021771	BN310P LED200/865 PSD-VLC WB EL L1700 WH	-20 to +45 °C
919406021781	BN310P LED200/865 PSD-VLC WB L1700 WH	-20 to +45 °C
919406021791	BN310P LED200/865 PSU HRO EL L1700 WH	-20 to +45 °C
919406021811	BN310P LED200/865 PSU MB EL L1700 WH	-20 to +45 °C
919406021821	BN310P LED200/865 PSU MB L1700 WH	-20 to +45 °C
919406021831	BN310P LED200/865 PSU WB EL L1700 WH	-20 to +45 °C
919406021841	BN310P LED200/865 PSU WB L1700 WH	-20 to +45 °C
919406021851	BN310P LED200/865PSD-VLC HRO EL L1700 WH	-20 to +45 °C
919406021861	BN310P LED70/840 WIA WB L1150 WH	-20 to +45 °C
919406021881	BN310P LED70/865 WIA WB L1150 WH	-20 to +45 °C
919406021891	BN310P LED70/865 WIA MB L1150 WH	-20 to +45 °C
919406022101	BN310P LED230/840 PSD- VLC WB L1700 WH	-20 to +45 °C
919406022111	BN310P LED230/840 PSD-VLC HRO L1700 WH	-20 to +45 °C
919406022121	BN310P LED230/840 PSD-VLC MB L1700 WH	-20 to +45 °C
820619284281	BN310P LED92/865 PSU MB L1150 BK	-20 to +45 °C
820619284431	BN310P LED92/830 PSU MB L1150 BK	-20 to +45 °C
820619284681	BN310P LED70/840 PSU WB L1150 BK	-20 to +45 °C
820619284691	BN310P LED70/840 PSU WB EL L1150 BK	-20 to +45 °C
820619284701	BN310P LED70/830 PSU MB L1150 BK	-20 to +45 °C
919406020861	BN310P LED92/840 PSU DA L1150 BK	-20 to +35 °C
919406020871	BN310P LED92/840 PSD- VLC DA L1150 BK	-20 to +35 °C
919406020941	BN310P LED92/840 PSU WB L1150 BK	-20 to +35 °C
919406021311	BN310P LED92/840 PSD-VLC WB L1150 BK	-20 to +35 °C
919406021321	BN310P LED92/840 PSU WB EL L1150 BK	-20 to +35 °C

Order Code	Full Product Name	Ambient temperature range
919406021331	BN310P LED92/840 PSD-VLC WB EL L1150 BK	-20 to +35 °C
919506310591	BN310P Xitanium 100W Driver Spare Part	-20 to +45 °C
919506310621	KIT 10x BN310P Bracket White Spare Parts	-20 to +45 °C
919506310631	BN310P Bracket Black Spare Part	-20 to +45 °C
919506310601	BN310P CertaDriver 44W Spare Part 5 PCES	-20 to +45 °C
919506310611	BN310P CertaDriver 65W Spare Part 5 PCES	-20 to +45 °C

© 2026 Signify Holding. All rights reserved. The information provided herein is subject to change, without notice. Signify does not give any representation or warranty as to the accuracy or completeness of the information included herein and shall not be liable for any action in reliance thereon. The information presented in this document is not intended as any commercial offer and does not form part of any quotation or contract, unless otherwise agreed by Signify. Philips and the Philips Shield Emblem are registered trademarks of Koninklijke Philips N.V.