PHILIPS

**BN310P LED200/840 SRD H4 HRO L1700 WH**

919406022061



# SlimPerform Batten, 129 W, 20000 lm, 4000 K, InterAct Pro

Lighting plays a different role in every application. Some require latest-generation solutions with high light quality and connectivity; others just simple functionality. But whether for retail or industrial applications, you always need a combination of quality, performance, and flexibility. Get to know SlimPerform. The Batten LED luminaire where all these benefits come together. Putting the new lighting trend in your company.

## Warnings and Safety

- 5-year warranty

## General Information

| | |
|---|---|
| Light source replaceable | No |
| Driver included | Yes |
| Value ladder | Performance |

## Light Technical

| | |
|---|---|
| Luminous Flux | 20,000 lm |
| Correlated Color Temperature (Nom) | 4000 K |
| Luminous Efficacy (rated) (Nom) | 155.04 lm/W |
| Color rendering index (CRI) | >80 |

## Operating and Electrical

| | |
|---|---|
| Input Voltage | 220 to 240 V |
| Line Frequency | 50 or 60 Hz |
| Inrush current | 5.1 A |
| Inrush time | 0.76 ms |
| Power Consumption | 129 W |
| Power Factor (Fraction) | 0.92 |
| Connection | Connection unit 3-pole |
| Cable | Cable 0.25 m with connector 3-pole |
| Protection class IEC | Safety class I |

## Controls and Dimming

| | |
|---|---|
| Dimmable | Wireless Dim |
| Driver/power unit/transformer | Sensor ready driver Interact System ready |
| Control interface | InterAct Pro |
| Constant light output | No |
| Maximum dim level | Programmable |

## Mechanical and Housing

| | |
|---|---|
| Housing Material | Aluminium |
| Housing Color | White |
| Mounting device | Mounting bracket |
| Overall length | 1,691 mm |
| Overall width | 59 mm |
| Overall height | 82 mm |
| Dimensions (Height x Width x Depth) | 82 x 59 x 1691 mm |
| Ingress protection code | IP20 [Finger-protected] |
| Net Weight (Piece) | 2.500 kg |

## Approval and Application

| | |
|---|---|
| Ambient temperature range | -20 to +45 °C |

## Dimensional drawing

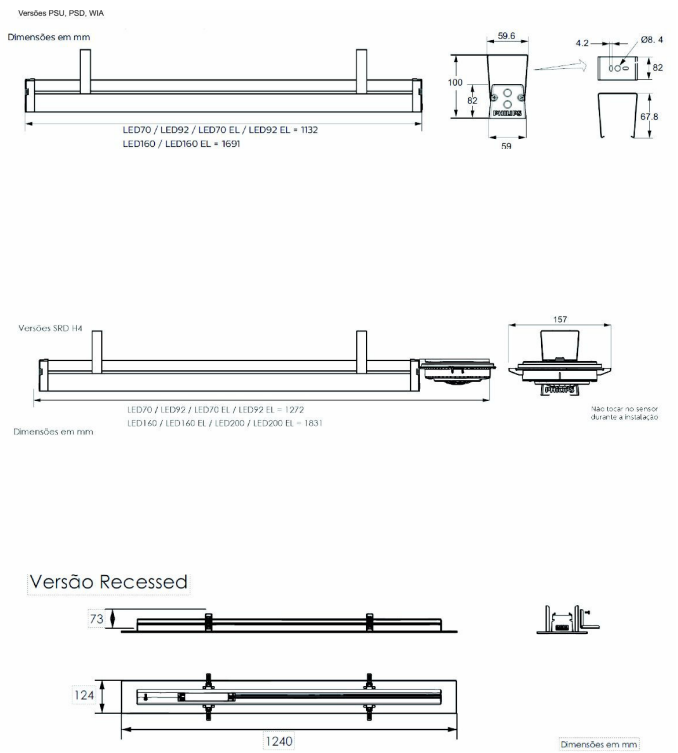


## Initial Performance (IEC Compliant)

| | |
|---|---|
| Luminous flux tolerance | +/-10% |
| Power consumption tolerance | +/-10% |

## Over Time Performance (IEC Compliant)

| | |
|---|---|
| Median useful life L70B50 | 60,000 hour(s) |

## Product Data

| | |
|---|---|
| Order product name | BN310P LED200/840 SRD H4 HRO L1700 WH |
| Full product name | BN310P LED200/840 SRD H4 HRO L1700 WH |
| Order code | 919406022061 |
| Material Nr. (12NC) | 919406022061 |
| Numerator - Quantity Per Pack | 1 |
| EAN/UPC - Product/Case | 7894400003074 |
| Numerator - Packs per outer box | 1 |
| EAN/UPC - Case | 17894400003071 |

## Related Documents

| Photometry and lighting design | Document Name | Download |
| --- | --- | --- |
| IES File | BN310P LED200 840 SRD H4 HRO L1700 WH.ies | Download |

© 2026 Signify Holding. All rights reserved. The information provided herein is subject to change, without notice. Signify does not give any representation or warranty as to the accuracy or completeness of the information included herein and shall not be liable for any action in reliance thereon. The information presented in this document is not intended as any commercial offer and does not form part of any quotation or contract, unless otherwise agreed by Signify. Philips and the Philips Shield Emblem are registered trademarks of Koninklijke Philips N.V.