PHILIPS

**DN058B LED20/865**
**110-240V L275 SQ**

911401803888



# SmartBright Downlight DN058 WV, 22 W, 2000 lm, 6500 K, Symmetric 110$^0$, Matte, IP20 | Finger-protected

SmartBright downlight DN058 WV series products offer reliable lighting performance with long lifetime and meet all the IEC safety regulation requirements. Products have multiple installation, including both recessed and surface mount. Products also have Different shapes as options, round and square shape can meet different customer's requirement. Products have three CCT options with different cut out solutions. Products have no harm to eyes and give eye comfortable experience.

## General Information

| | |
|---|---|
| Number of gear units | 1 unit |
| Gear | EB [Electronic] |
| Driver included | Yes |
| Light source engine type | LED |
| Value ladder | Value |
| Warranty period | 1 years |

## Light Technical

| | |
|---|---|
| Luminous Flux | 2,000 lm |
| Correlated Color Temperature (Nom) | 6500 K |
| Luminous Efficacy (rated) (Nom) | 91 lm/W |
| Color rendering index (CRI) | >80 |
| Number of light sources | 1 |
| Beam angle of light source | 110 degree(s) |
| Light source color | 865 cool daylight |
| Optic type | Symmetric 110$^0$ |
| Luminaire light beam spread | 110° |
| Unified glare rating CEN | 30 |
| Effective projected area | 0.75 m$^2$ |

## Operating and Electrical

| | |
|---|---|
| Input Voltage | 110 to 240 V |
| Line Frequency | 50 or 60 Hz |

| | |
|---|---|
| Inrush current | 20.2 A |
| Inrush time | 0.19 ms |
| Power Consumption | 22 W |
| Power Factor (Fraction) | 0.5 |
| Connection | Flying leads/wires |
| Cable | 2×0.75mm² |
| Number of products on MCB of 16 A type B | 35 |
| Suitable for random switching | No |
| Protection class IEC | Safety class II |

## Controls and Dimming

| | |
|---|---|
| Dimmable | No |
| Control interface | - |
| Maximum dim level | Not applicable |

## Mechanical and Housing

| | |
|---|---|
| Housing Material | Polypropylene |
| Reflector material | - |
| Optic material | Polystyrene |
| Optical cover material | Polystyrene |
| Housing Color | White RAL 9003 |
| Mounting device | Recessed mounting box round |
| Optical cover finish | Matte |
| Overall length | 295 mm |
| Overall width | 295 mm |
| Overall height | 35 mm |
| Dimensions (Height x Width x Depth) | 35 x 295 x 295 mm |
| Ingress protection code | IP20 [Finger-protected] |
| Mech. impact protection code | IK03 [0.3 J] |
| Optical cover type | PS |
| Net Weight (Piece) | 0.330 kg |

## Approval and Application

| | |
|---|---|
| Glow-wire test | Temperature 650 °C, duration 30 s |
| Flammability mark | For mounting on normally flammable surfaces |
| CE mark | No |
| ENEC mark | - |
| Photobiological risk | Photobiological risk group 0 @200mm to EN62778 |
| Photobiological risk specification | 0.2 m |
| EU RoHS compliant | Yes |
| Performance ambient temperature Tq | 25 °C |
| Ambient temperature range | -20 to +40 °C |

## Initial Performance (IEC Compliant)

| | |
|---|---|
| Luminous flux tolerance | -10%,+15% |
| Initial chromaticity | (0.31,0.33) SDCM≤6 |
| Power consumption tolerance | +/-10% |

## Product Data

| | |
|---|---|
| Order product name | DN058B LED20/865 110-240V L275 SQ |
| Full product name | DN058B LED20/865 110-240V L275 SQ |
| Full product code | 872110331841199 |
| Order code | 911401803888 |
| Material Nr. (12NC) | 911401803888 |
| Numerator - Quantity Per Pack | 1 |
| EAN/UPC - Product/Case | 8721103318411 |
| Numerator - Packs per outer box | 10 |
| EAN/UPC - Case | 8721103319289 |

## Dimensional drawing

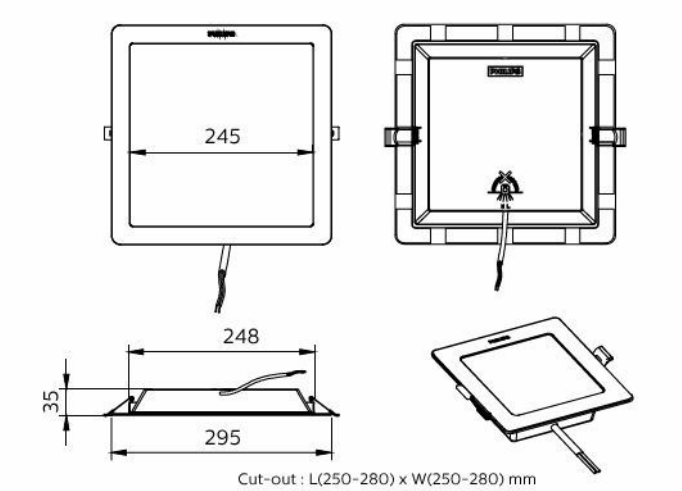


© 2026 Signify Holding. All rights reserved. The information provided herein is subject to change, without notice. Signify does not give any representation or warranty as to the accuracy or completeness of the information included herein and shall not be liable for any action in reliance thereon. The information presented in this document is not intended as any commercial offer and does not form part of any quotation or contract, unless otherwise agreed by Signify. Philips and the Philips Shield Emblem are registered trademarks of Koninklijke Philips N.V.