PHILIPS

RC048B LED40S/840 PSU W60L60 GM G3

911401898587



SmartBright Direct-lit Panel RC048, 105 lm/W, 840 neutral white

The Philips SmartBright range is comprised of a selection of essential LED luminaires that come with Philips high levels of quality at a competitive price. Reliable, energy efficient and affordable lighting solutions that you can count on to deliver what they promise. Philips SmartBright Panels are our most affordable LED solution. The complete product family is available in multiple mounting types, product dimensions and lumen options to suit the widest range of applications. And thanks to the direct-lit structure, SmartBright panels deliver both higher system efficacy and excellent lighting uniformity. The essential range of LED panels for everyday installations.

General Information

Light source engine type	LED
Value ladder	Value

Light Technical

Luminous Flux	4,000 lm
Correlated Color Temperature (Nom)	4000 K
Luminous Efficacy (rated) (Nom)	105 lm/W
Color rendering index (CRI)	≥80
Light source color	840 neutral white
Unified glare rating CEN	23

Operating and Electrical

Input Voltage	220 to 240 V
Line Frequency	50 or 60 Hz
Power Consumption	38 W
Power Factor (Fraction)	0.9
Number of products on MCB of 16 A type B	42
Protection class IEC	Safety class II

Controls and Dimming

Dimmable	No
Control interface	-

Mechanical and Housing

Housing Material	Steel
Optical cover material	Polystyrene
Housing Color	White RAL 9003
Optical cover finish	Opal
Ingress protection code	IP20 [Finger-protected]
Mech. impact protection code	IK02 [0.2 J standard]
Optical cover type	Polymethyl methacrylate lens
Net Weight (Piece)	1.110 kg

Dimensional drawing

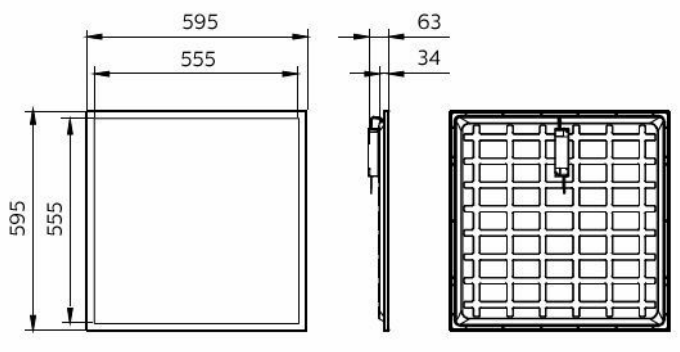

Approval and Application

CE mark	No
Ambient temperature range	-10 to +40 °C

Initial Performance (IEC Compliant)

Luminous flux tolerance	-10% / +10%
Power consumption tolerance	+/-10%

Product Data

Order product name	RC048B LED40S/840 PSU W60L60 GM G3
Full product name	RC048B LED40S/840 PSU W60L60 GM G3
Full product code	872110331787299
Order code	911401898587
Material Nr. (12NC)	911401898587
Numerator - Quantity Per Pack	1
EAN/UPC - Product/Case	8721103317872
Numerator - Packs per outer box	6
EAN/UPC - Case	8721103317872

Related Documents

Documents and certificates	Document Name	Download
Installation Instructions	RC048B-G3-MI-INI.pdf	Download

Photometry and lighting design	Document Name	Download
IES File	RC048G3-6060.ies	Download

© 2026 Signify Holding. All rights reserved. The information provided herein is subject to change, without notice. Signify does not give any representation or warranty as to the accuracy or completeness of the information included herein and shall not be liable for any action in reliance thereon. The information presented in this document is not intended as any commercial offer and does not form part of any quotation or contract, unless otherwise agreed by Signify. Philips and the Philips Shield Emblem are registered trademarks of Koninklijke Philips N.V.