PHILIPS

BY415P LED165S CW PSU GR FG WB XTFCL V1

919515812644



Robust and Superior aesthetics Circular Highbay suitable for versatile applications

Maxoled LED highbay is a luminaire designed to provide undisrupted and uniform lighting for industrial application and is an ideal solution for higher mounting heights, high temperature application and special heavy-duty industry. It enables a safe working environment with leading specifications and comfortable light. At the same time, it lowers the overall maintenance cost. Robustness and aesthetics make this highbay a perfect solution for versatile applications such as manufacturing unit, Airport hangar area, shop floor, warehouse/storage area, heavy duty industries etc.

Warnings and Safety

- Meant for use in Indoor Industrial environment only

General Information

Driver included	Yes
Light source engine type	LED
Warranty period	2 years

Light Technical

Luminous Flux	16,500 lm
Correlated Color Temperature (Nom)	6500 K
Luminous Efficacy (rated) (Nom)	122 lm/W
Color rendering index (CRI)	>80
Beam angle of light source	110 degree(s)
Light source color	865 cool daylight
Optic type	Beam angle 110°
Luminaire light beam spread	110°

Operating and Electrical

Input Voltage	120 to 277 V
Line Frequency	50 Hz
Power Consumption	135 W
Power Factor (Fraction)	0.95
Protection class IEC	Safety class I
Surge Protection (Common/ Differential)	Surge protection level until 4 kV

Controls and Dimming

Dimmable	No
Control interface	-

Mechanical and Housing

Housing Material	Aluminum die cast
Optic material	Polycarbonate
Optical cover material	Polycarbonate
Housing Color	Gray
Mounting device	Eye-Bolt
Material	Aluminum
Ingress protection code	IP65 [Dust penetration-protected, jet-proof]
Mech. impact protection code	IK08 [5 J vandal-protected]
Optical cover type	Tempered glass
Net Weight (Piece)	7.600 kg

Approval and Application

Flammability mark	For mounting on normally flammable surfaces
Ambient temperature range	0 to +50 °C

Initial Performance (IEC Compliant)

Initial chromaticity	<5
Power consumption tolerance	+/-10%

Over Time Performance (IEC Compliant)

Median useful life L70B50	50,000 hour(s)

Product Data

Order product name	BY415P LED165S CW PSU GR FG WB XTFCL V1
Full product name	BY415P LED165S CW PSU GR FG WB XTFCL V1
Order code	919515812644
Material Nr. (12NC)	919515812644
Numerator - Quantity Per Pack	1
Numerator - Packs per outer box	1

Dimensional drawing

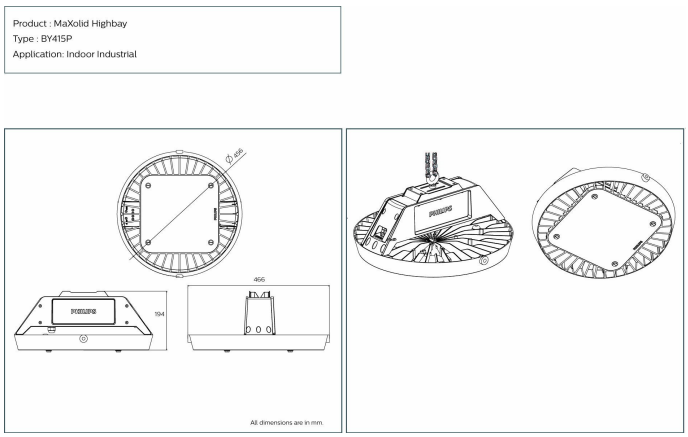

Related Documents

Documents and certificates	Document Name	Download
Installation Instructions	Maxoled_Highbay-BY415P-INI.pdf	Download

Photometry and lighting design	Document Name	Download
IES File	Maxoled-BY415P LED165S CW PSU GR FG WB XTFCL V1.IES	Download

© 2026 Signify Holding. All rights reserved. The information provided herein is subject to change, without notice. Signify does not give any representation or warranty as to the accuracy or completeness of the information included herein and shall not be liable for any action in reliance thereon. The information presented in this document is not intended as any commercial offer and does not form part of any quotation or contract, unless otherwise agreed by Signify. Philips and the Philips Shield Emblem are registered trademarks of Koninklijke Philips N.V.