A full indirect light troffer

CoreView G4 RC420B

RC420B G4 inherits the elegant and classic indirect light design from previous generation but with slimmer outlook. It offers 3 types, 600x600,300x1200, and 600x1200 (Customized offer)mm with max: 108lm/w. Air slot option applies to 600x1200mm type to give fast and easy support to the projects where air outlet is required from the office lighting fittings. Full indirect light design provides visual comfort in the office area as well.

Benefits

- Full range offer from 600x600, 300x1200 to 600x1200(Customized offer) to cover key applications
- High system efficacy from indirect light design to provide additional energy saving
- Dali, Tunable white, Interact Office options are available for total system offer
- Slim design for critical office space installation

Features

- System efficiency 108lm/W(max)
- CRI80 and CRI90 (with customized solution)
- Max height <=90mm (without driver)
- Lifetime: 50K hours (L70@25deg)

Application

- Open plan office
- Public indoor area
- Meeting/Training room

Specifications

Mounting type	Recessed
Ceiling type	T-bar ceiling

Mains Voltage	220-240V / 50-60Hz

CoreView G4 RC420B

Dimming	PSU: non-dimmable
	PSD: Dimmable via Dali-broadcasting
Material	Housing: metal sheet
Lumen maintenance at median useful life 50.000h	L70B50

Color Rendering index - CRI	840, 850, 940, 950
Risk Group	RG0
Ingress protection	IP20
Driver replaceable	Yes

Versions



CoreView G4 RC420 603603



CoreView G4 RC420 300300

Dimensional drawing

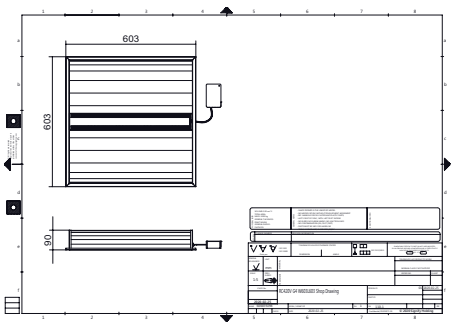

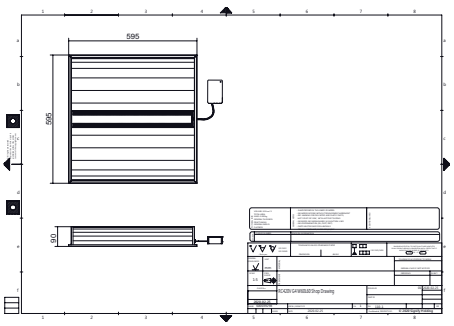

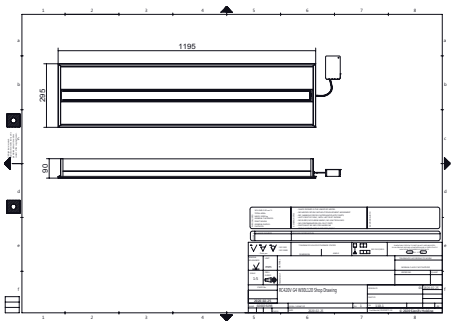

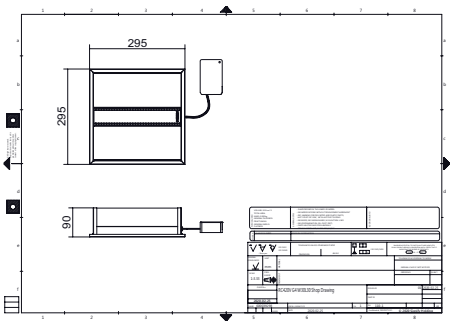

CoreView G4 RC420B

General Information	
Service tag	Yes
Operating and Electrical	
Line Frequency	50 or 60 Hz
Mechanical and Housing	
Optical cover type	-
Housing Color	White RAL 9003
Mech. impact protection code	-
Ingress protection code	IP20
Approval and Application	
Ambient temperature range	-20 to +45 °C
CE mark	Yes
Initial Performance (IEC Compliant)	
Luminous flux tolerance	+/-10%

Light Technical

Order Code	Full Product Name	Correlated Color Temperature (Nom)	Color rendering index (CRI)	Luminous Efficacy (rated) (Nom)	Luminous Flux
911401594671	RC420V G4 LED38/840 W603L603 PSU	4000 K	>80	103 lm/W	3,700 lm
911401595471	RC420V G4 LED35/940 W603L603 PSU	4000 K	>90	97 lm/W	3,500 lm
911401596271	RC420V G4 LED38/840 W603L603 PSD	4000 K	>80	103 lm/W	3,700 lm
911401594071	RC420V G4 LED38/840 W30L120 PSU	4000 K	>80	111 lm/W	4,000 lm
911401594171	RC420V G4 LED38/850 W30L120 PSU	5000 K	>80	111 lm/W	4,000 lm
911401594871	RC420V G4 LED35/940 W30L120 PSU	4000 K	>90	105 lm/W	3,780 lm
911401594971	RC420V G4 LED35/950 W30L120 PSU	5000 K	>90	105 lm/W	3,780 lm
911401595671	RC420V G4 LED38/840 W30L120 PSD	4000 K	>80	111 lm/W	4,000 lm
911401597471	RC420V G4 LED38/9TW W30L120	3000 - 6500 K	>80	89 lm/W	3,290 lm
911401595271	RC420V G4 LED16/940 W30L30 PSU	4000 K	>90	89 lm/W	1,700 lm
911401595371	RC420V G4 LED16/950 W30L30 PSU	5000 K	>90	89 lm/W	1,700 lm
911401594271	RC420V G4 LED38/840 W60L60 PSU	4000 K	>80	106 lm/W	3,800 lm
911401594371	RC420V G4 LED38/850 W60L60 PSU	5000 K	>80	106 lm/W	3,800 lm
911401595071	RC420V G4 LED35/940 W60L60 PSU	4000 K	>90	100 lm/W	3,600 lm
911401595171	RC420V G4 LED35/950 W60L60 PSU	5000 K	>90	100 lm/W	3,600 lm
911401595871	RC420V G4 LED38/840 W60L60 PSD	4000 K	>80	106 lm/W	3,800 lm
911401595971	RC420V G4 LED38/850 W60L60 PSD	5000 K	>80	106 lm/W	3,800 lm
911401596671	RC420V G4 LED35/940 W60L60 PSD	4000 K	>90	100 lm/W	3,600 lm
911401597371	RC420V G4 LED38/8TW W60L60	3000 - 6500 K	>80	90 lm/W	3,500 lm
911401597571	RC420V G4 LED38/9TW W60L60	3000 - 6500 K	>80	84 lm/W	3,290 lm

Operating and Electrical

Order Code	Full Product Name	Protection class IEC	Input Voltage	Power Consumption
911401594671	RC420V G4 LED38/840 W603L603 PSU	Safety class II	110 to 240 V	36 W

Order Code	Full Product Name	Protection class IEC	Input Voltage	Power Consumption
911401595471	RC420V G4 LED35/940 W603L603 PSU	Safety class II	110 to 240 V	36 W

CoreView G4 RC420B

Order Code	Full Product Name	Protection class IEC	Input Voltage	Power Consumption
911401596271	RC420V G4 LED38/840 W603L603 PSD	Safety class II	110 to 240 V	36 W
911401594071	RC420V G4 LED38/840 W30L120 PSU	Safety class II	220 to 240 V	36 W
911401594171	RC420V G4 LED38/850 W30L120 PSU	Safety class II	220 to 240 V	36 W
911401594871	RC420V G4 LED35/940 W30L120 PSU	Safety class II	220 to 240 V	36 W
911401594971	RC420V G4 LED35/950 W30L120 PSU	Safety class II	220 to 240 V	36 W
911401595671	RC420V G4 LED38/840 W30L120 PSD	Safety class II	220 to 240 V	36 W
911401597471	RC420V G4 LED38/9TW W30L120	Safety class I	220 to 240 V	37 W
911401595271	RC420V G4 LED16/940 W30L30 PSU	Safety class II	220 to 240 V	19 W
911401595371	RC420V G4 LED16/950 W30L30 PSU	Safety class II	220 to 240 V	19 W

Order Code	Full Product Name	Protection class IEC	Input Voltage	Power Consumption
911401594271	RC420V G4 LED38/840 W60L60 PSU	Safety class II	220 to 240 V	36 W
911401594371	RC420V G4 LED38/850 W60L60 PSU	Safety class II	220 to 240 V	36 W
911401595071	RC420V G4 LED35/940 W60L60 PSU	Safety class II	220 to 240 V	36 W
911401595171	RC420V G4 LED35/950 W60L60 PSU	Safety class II	220 to 240 V	36 W
911401595871	RC420V G4 LED38/840 W60L60 PSD	Safety class II	220 to 240 V	36 W
911401595971	RC420V G4 LED38/850 W60L60 PSD	Safety class II	220 to 240 V	36 W
911401596671	RC420V G4 LED35/940 W60L60 PSD	Safety class II	220 to 240 V	36 W
911401597371	RC420V G4 LED38/8TW W60L60	Safety class I	220 to 240 V	39 W
911401597571	RC420V G4 LED38/9TW W60L60	Safety class I	220 to 240 V	39 W

Controls and Dimming

Order Code	Full Product Name	Dimmable
911401594671	RC420V G4 LED38/840 W603L603 PSU	No
911401595471	RC420V G4 LED35/940 W603L603 PSU	No
911401596271	RC420V G4 LED38/840 W603L603 PSD	Yes
911401594071	RC420V G4 LED38/840 W30L120 PSU	No
911401594171	RC420V G4 LED38/850 W30L120 PSU	No
911401594871	RC420V G4 LED35/940 W30L120 PSU	No
911401594971	RC420V G4 LED35/950 W30L120 PSU	No
911401595671	RC420V G4 LED38/840 W30L120 PSD	Yes
911401597471	RC420V G4 LED38/9TW W30L120	Yes
911401595271	RC420V G4 LED16/940 W30L30 PSU	No

Order Code	Full Product Name	Dimmable
911401595371	RC420V G4 LED16/950 W30L30 PSU	No
911401594271	RC420V G4 LED38/840 W60L60 PSU	No
911401594371	RC420V G4 LED38/850 W60L60 PSU	No
911401595071	RC420V G4 LED35/940 W60L60 PSU	No
911401595171	RC420V G4 LED35/950 W60L60 PSU	No
911401595871	RC420V G4 LED38/840 W60L60 PSD	Yes
911401595971	RC420V G4 LED38/850 W60L60 PSD	Yes
911401596671	RC420V G4 LED35/940 W60L60 PSD	Yes
911401597371	RC420V G4 LED38/8TW W60L60	Yes
911401597571	RC420V G4 LED38/9TW W60L60	Yes

CoreView G4 RC420B

© 2025 Signify Holding All rights reserved. Signify does not give any representation or warranty as to the accuracy or completeness of the information included herein and shall not be liable for any action in reliance thereon. The information presented in this document is not intended as any commercial offer and does not form part of any quotation or contract, unless otherwise agreed by Signify. All trademarks are owned by Signify Holding or their respective owners.