PHILIPS

**ST033T G2 LED17/940 20W I WB BK GM**

911401833387




# Essential Smartbright Projector Gen 2, 20 W, 1700 lm, 4000 K, 36°

Essential SmartBright Projector ST033T is a value for money product designed for Mass market trade. It is designed to replace halogen and CDM-standard-based projectors for retail and hospitality applications. This track based luminaire supports retailers to let their products stand out, or highlight certain objects. The clean and contemporary design with integrated driver, and choice in 24 or 36 degree beam angle makes the Essential SmartBright Projector relevant to many applications. The choice of 2 colors in White and Black helps the Retailer to choose products best suited to blend into the Store Environment. Compared to it's predecessor, it is not only cost effective, but also a more sleek and lighter product design. The product family includes 1M and 2M Track in Black and white color with I and L connector to support various applications.

## General Information

| | |
|---|---|
| Number of gear units | 1 unit |
| Gear | EB [Electronic] |
| Driver included | Yes |
| Light source engine type | LED |
| Value ladder | Value |

## Light Technical

| | |
|---|---|
| Luminous Flux | 1,700 lm |
| Correlated Color Temperature (Nom) | 4000 K |
| Luminous Efficacy (rated) (Nom) | 85 lm/W |
| Color rendering index (CRI) | 90 |
| Number of light sources | 1 |
| Beam angle of light source | 36 degree(s) |
| Light source color | 940 neutral white |
| Optic type | Beam angle 36° |
| Luminaire light beam spread | 36° |
| Unified glare rating CEN | Not applicable |
| Effective projected area | 0.75 $m^2$ |

## Operating and Electrical

| | |
|---|---|
| Input Voltage | 220-240 V |
| Line Frequency | 50 or 60 Hz |
| Inrush current | 13.8 A |
| Inrush time | 0.1 ms |
| Power Consumption | 20 W |
| Power Factor (Fraction) | 0.5 |
| Connection | Track |
| Cable | - |
| Number of products on MCB of 16 A type B | 48 |
| Suitable for random switching | No |
| Protection class IEC | Safety class I |

## Controls and Dimming

| | |
|---|---|
| Dimmable | - |
| Control interface | - |
| Maximum dim level | Not applicable |

## Mechanical and Housing

| | |
|---|---|
| Housing Material | Aluminium |
| Reflector material | - |
| Optic material | Polycarbonate |
| Optical cover material | Polycarbonate |
| Housing Color | Black |
| Mounting device | - |
| Optical cover finish | Clear |
| Ingress protection code | IP20 [Finger-protected] |
| Mech. impact protection code | IK03 [0.3 J] |
| Optical cover type | Polycarbonate |
| Net Weight (Piece) | 0.280 kg |

## Approval and Application

| | |
|---|---|
| Glow-wire test | Temperature 650 °C, duration 30 s |
| Flammability mark | For mounting on normally flammable surfaces |
| CE mark | No |
| ENEC mark | - |
| Photobiological risk | Photobiological risk group 1 @200mm to EN62778 |
| EU RoHS compliant | Yes |
| Performance ambient temperature Tq | 25 °C |
| Ambient temperature range | -20 to +45 °C |

## Initial Performance (IEC Compliant)

| | |
|---|---|
| Luminous flux tolerance | -0%,+20% |
| Initial chromaticity | (0.38,0.38) SDCM<5 |
| Power consumption tolerance | +/-10% |

## Product Data

| | |
|---|---|
| Order product name | ST033T G2 LED17/940 20W I WB BK GM |
| Full product name | ST033T G2 LED17/940 20W I WB BK GM |
| Full product code | 872016976272599 |
| Order code | 911401833387 |
| Material Nr. (12NC) | 911401833387 |
| Numerator - Quantity Per Pack | 1 |
| EAN/UPC - Product/Case | 8720169762725 |
| Numerator - Packs per outer box | 30 |
| EAN/UPC - Case | 8720169763005 |

## Dimensional drawing

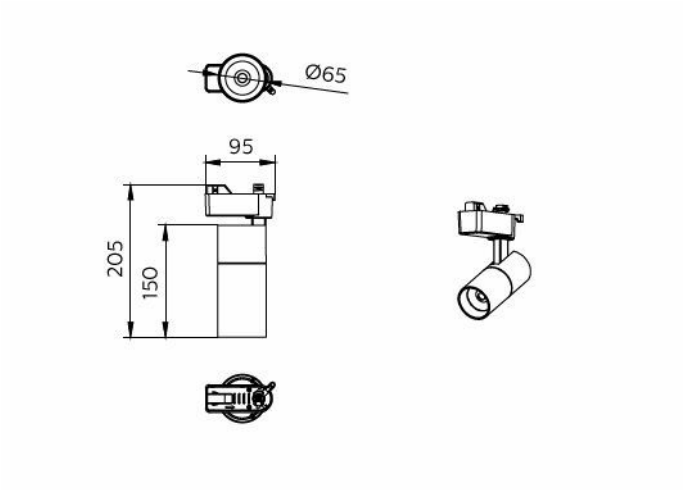


## Related Documents

| Documents and certificates | Document Name | Download |
|---|---|---|
| Installation Instructions | ST033-G2-MI-EM.pdf | Download |

| Photometry and lighting design | Document Name | Download |
|---|---|---|
| IES File | ST033T-G2-940-20W-36.ies | Download |

© 2026 Signify Holding. All rights reserved. The information provided herein is subject to change, without notice. Signify does not give any representation or warranty as to the accuracy or completeness of the information included herein and shall not be liable for any action in reliance thereon. The information presented in this document is not intended as any commercial offer and does not form part of any quotation or contract, unless otherwise agreed by Signify. Philips and the Philips Shield Emblem are registered trademarks of Koninklijke Philips N.V.