PHILIPS

BN013C LED10/CW L600 G3

911401809282



Smartbright T8 Batten, 10 W, 1000 lm, 6500 K

Whether for a new building or renovation of an existing space, customers want lighting solutions that provide quality of light and substantial energy and maintenance savings. New T8 LED batten range is perfect replacement for traditional battens with fluorescent lamps. The process of selecting, installing, and maintaining is so easy – it's a simple switch. The range offer customer to choose from various options, standalone batten, Batten with individual switch and connectable Battens in addition to 3 CCTs and 2 Wattages.

General Information

Light source engine type	LED
Value ladder	Value

Light Technical

Luminous Flux	1,000 lm
Correlated Color Temperature (Nom)	6500 K
Luminous Efficacy (rated) (Nom)	100 lm/W
Color rendering index (CRI)	>80
Light source color	865 cool daylight
Effective projected area	0.017 m^2

Operating and Electrical

Input Voltage	220 to 240 V
Line Frequency	50 or 60 Hz
Inrush current	9 A
Power Consumption	10 W
Power Factor (Fraction)	0.9
Number of products on MCB of 16 A type B	10
Protection class IEC	Safety class II

Controls and Dimming

Dimmable	No
Control interface	-

Mechanical and Housing

Housing Material	Polycarbonate
Optical cover material	Polycarbonate
Housing Color	White
Optical cover finish	Opal
Overall length	586 mm
Overall width	28.4 mm
Overall height	35.7 mm
Dimensions (Height x Width x Depth)	36 x 28 x 586 mm
Ingress protection code	IP20 [Finger-protected]
Mech. impact protection code	IK02 [0.2 J standard]
Optical cover type	Polycarbonate
Net Weight (Piece)	0.108 kg

Approval and Application

Flammability mark	For mounting on normally flammable surfaces
CE mark	Yes
Ambient temperature range	-20 to +40 °C

Dimensional drawing

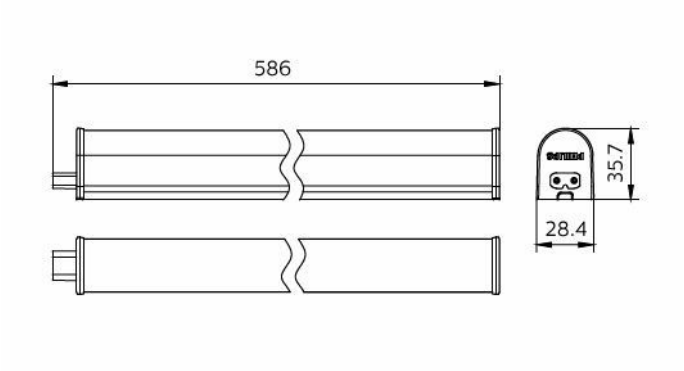

Initial Performance (IEC Compliant)

Luminous flux tolerance	+/-10%
Initial chromaticity	0.3123, 0.3282, SDCM≤5
Power consumption tolerance	+/-10%

Product Data

Order product name	BN013C LED10/CW L600 G3
Full product name	BN013C LED10/CW L600 G3
Full product code	871951451792999
Order code	911401809282
Material Nr. (12NC)	911401809282
Numerator - Quantity Per Pack	1
EAN/UPC - Product/Case	8719514517929
Numerator - Packs per outer box	40
EAN/UPC - Case	8719514518131

Related Documents

Documents and certificates	Document Name	Download
Installation Instructions	BN013C GM-MI.pdf	Download

Photometry and lighting design	Document Name	Download
IES File	BN012C-13C LED10S 840-830-865 L600.IES	Download

© 2026 Signify Holding. All rights reserved. The information provided herein is subject to change, without notice. Signify does not give any representation or warranty as to the accuracy or completeness of the information included herein and shall not be liable for any action in reliance thereon. The information presented in this document is not intended as any commercial offer and does not form part of any quotation or contract, unless otherwise agreed by Signify. Philips and the Philips Shield Emblem are registered trademarks of Koninklijke Philips N.V.