PHILIPS

Essential SmartBright LED Downlight

DN027



Less Hassle, More Savings

Essential SmartBright G2 LED Downlight is value for money product with high efficacy, good quality and reliability. It offers multiple configurations from 300lm to 2000lm output, to replace conventional downlight. It can be used for shopping mall, retail store, residential and office. It’s an ideal product family to distribute in trade market.

Benefits

- Reliability and safety: meets national and international regulation
- Energy saving: High system efficacy with lower power consumption
- Diversity: One stop shopping with multiple choices of recess round, square as well as surface-mount to fit your dedicated applications
- Easy to install with slim design

Applications

- Retail
- Office
- Residential

Features

- Long life time: 20Khrs to 30Khrs(L70B50@25°C)
- System efficiency: up to 85lm/W
- One family offers recess round, square and surface mount options
- Slim design: 33mm housing body height

Versions



DN200 G3



Downlight DN027B G3 SQ

DN020B G4



Downlight DN027B G3 RD

Downlight DN027C G3 RD



Downlight DN500B G3 RD

Dimensional drawing

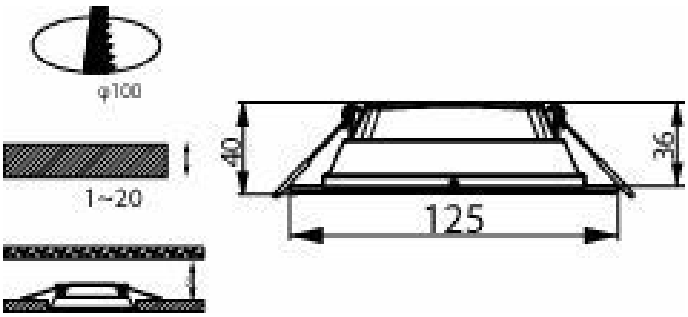

DN027B G3 LED6/WW 6W 220-240V D100 RD



DN020B G4 LED6/CW 7W 220-240V D100

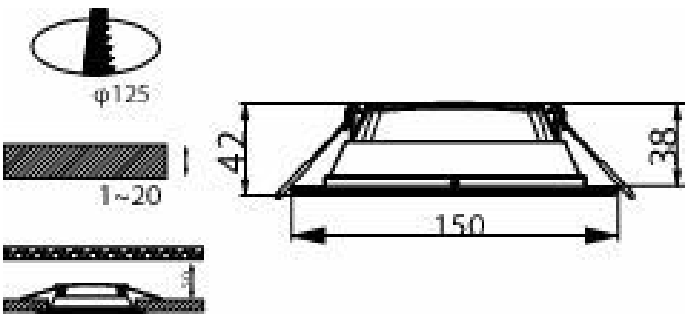

DN500B LED9/840 9W 220-240V D125 CN

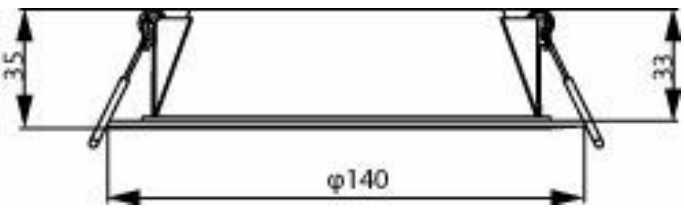

DN020B G4 LED9/NW 10.5W 220-240V D125

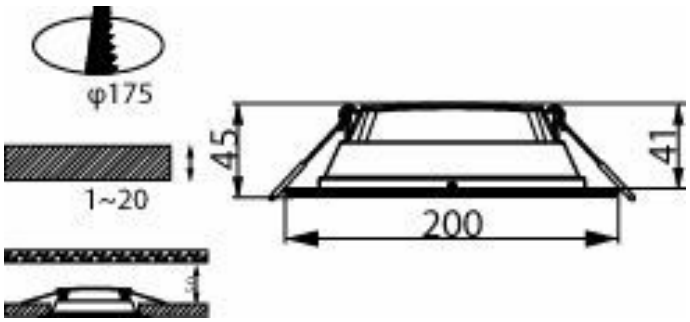

DN027B G3 LED15/NW 15W 220-240 D175 RD

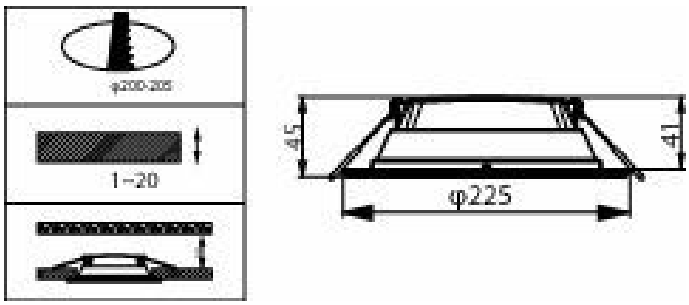

DN027B G3 LED20/WW 19W 220-240V D200 RD

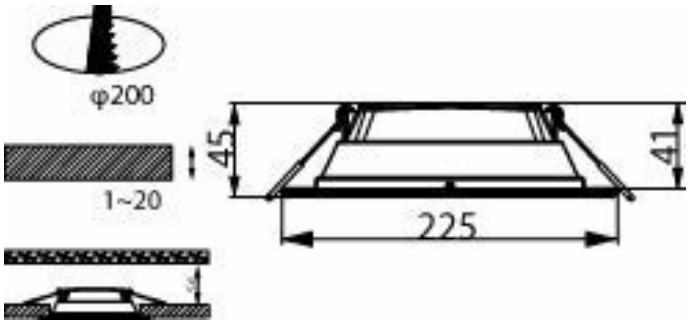

DN027B G3 LED20/WW 19W 220-240V D200 RD

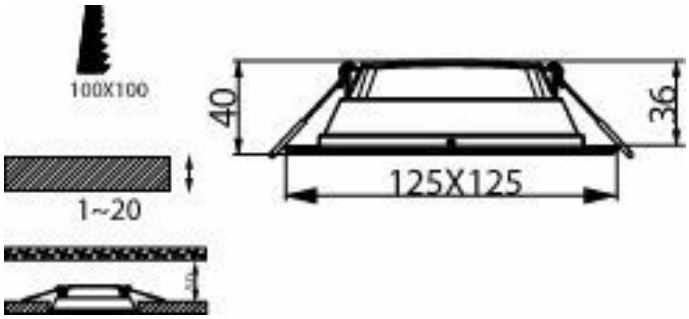

DN027B G3 LED6/WW 6W 220-240V L100 SQ

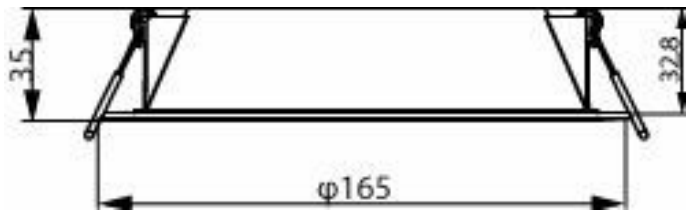

DN200 G3 LED9 840 9W D150 CN

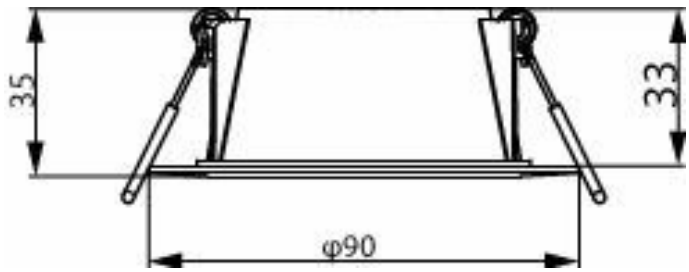

DN200 G3 LED3 830 3.5W D80 CN

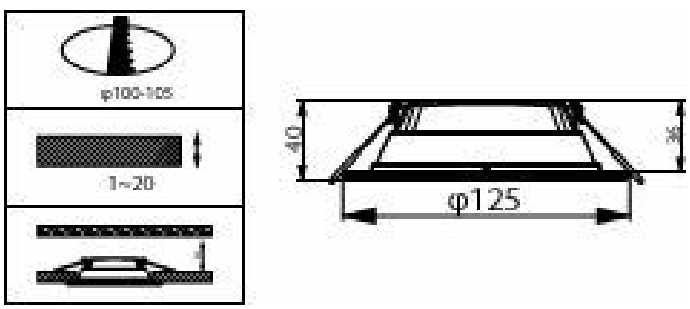

DN027B G3 LED6/WW 6W 220-240V D100 RD

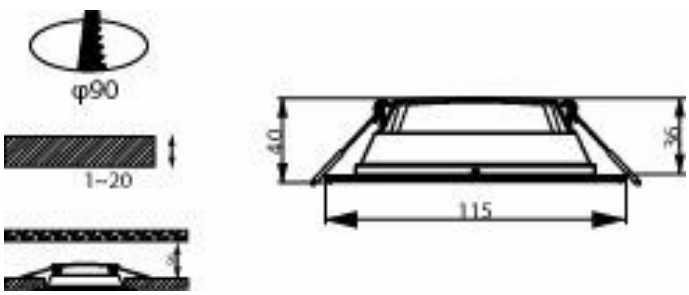

DN027B G3 LED6/CW 6W 220-240V D90 RD

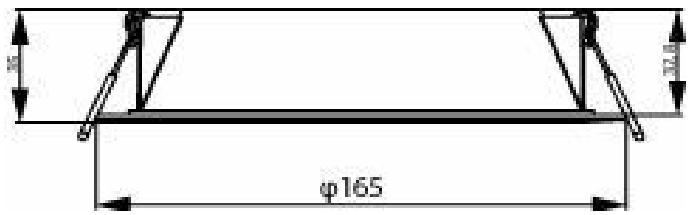

DN020B G4 LED12/CW 13W 220-240V D150

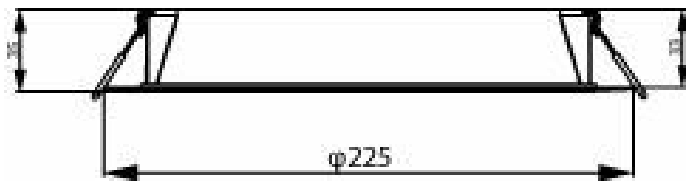

DN020B G4 LED20/CW 20W 220-240V D200

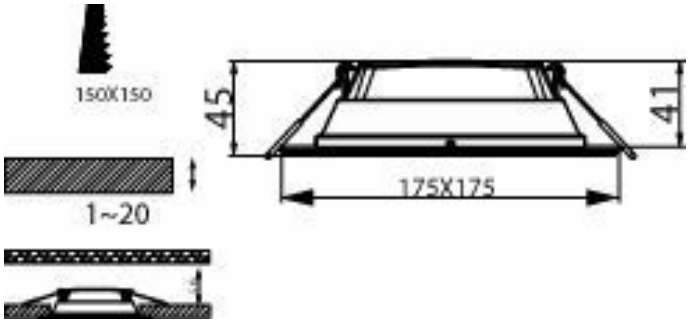

DN027B G3 LED12/WW 12W 220-240V L150 SQ



DN027C G3 LED9/NW 9W 220-240V D150

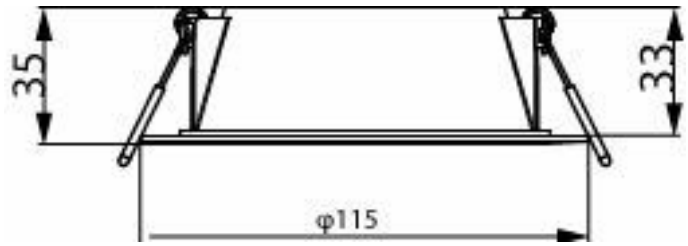

DN200 G3 LED6 840 7W D100 CN

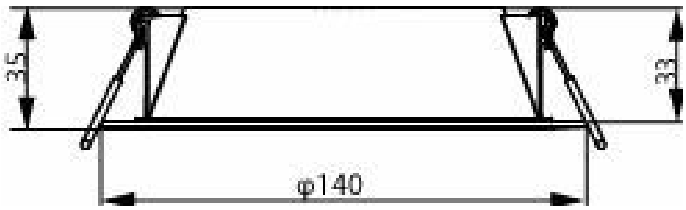

DN200 G3 LED9 830 10.5W D125 CN

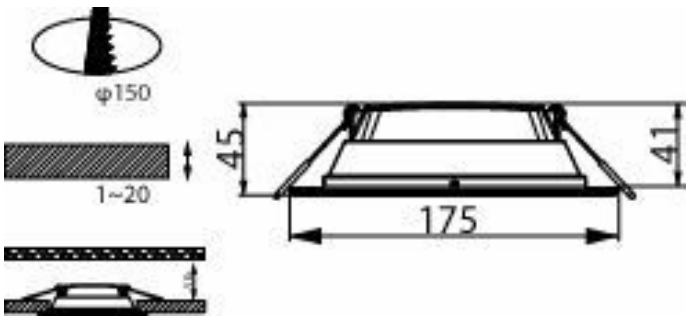

DN500B LED12/865 12W 220-240V D150 CN

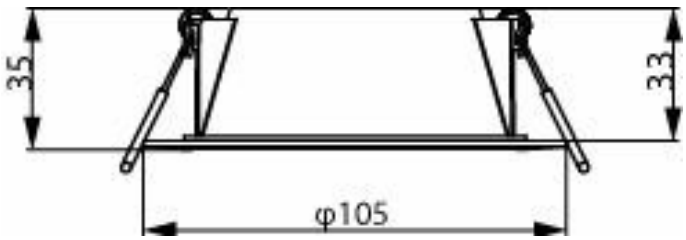

DN200 G3 LED4 865 4.5W D90 CN

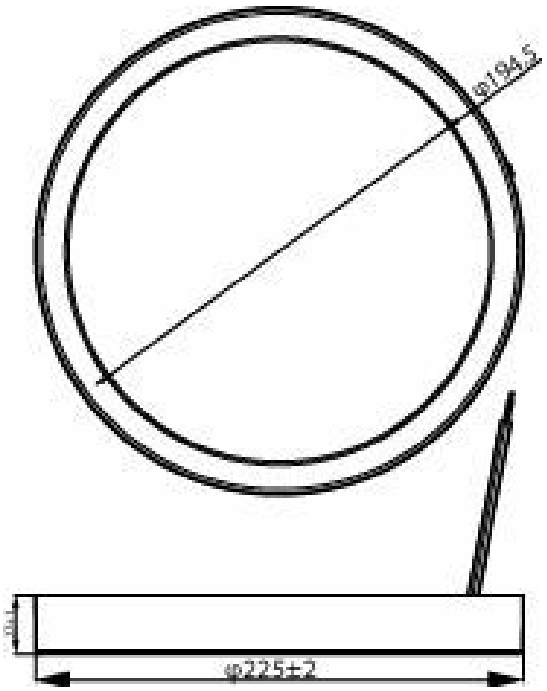

DN027C G3 LED20/NW 19W 220-240V D225

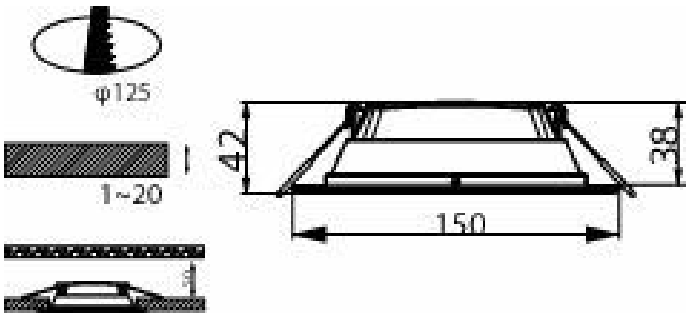

DN027B G3 LED9/NW 9W 220-240V D125 RU

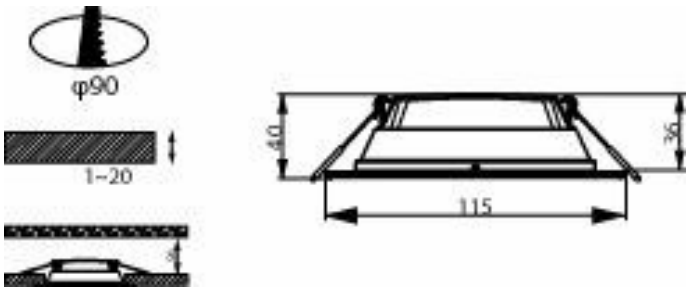

DN500B LED6/840 6W 220-240V D90 CN

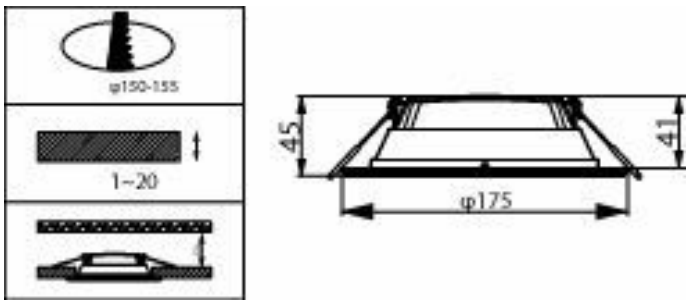

DN027B G3 LED12/NW 12W 220-240V D150 RU

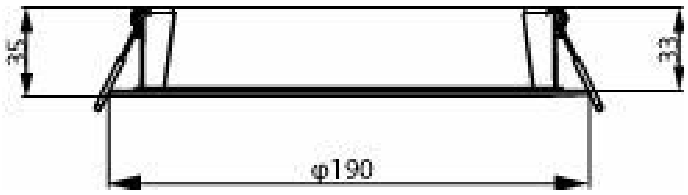

DN200 G3 LED15 830 16W D175 CN

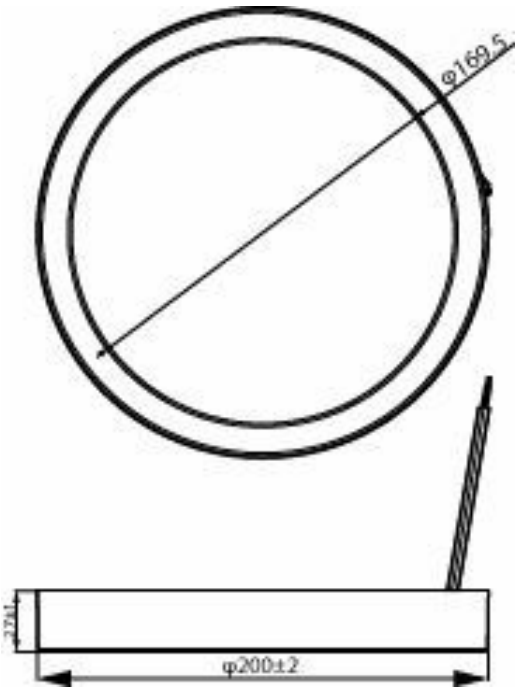

DN027C G3 LED15/CW 15W 220-240V D200

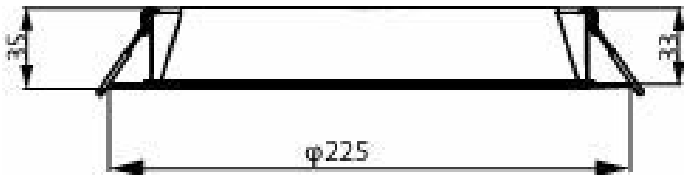

DN200 G3 LED20 865 20W D200 CN

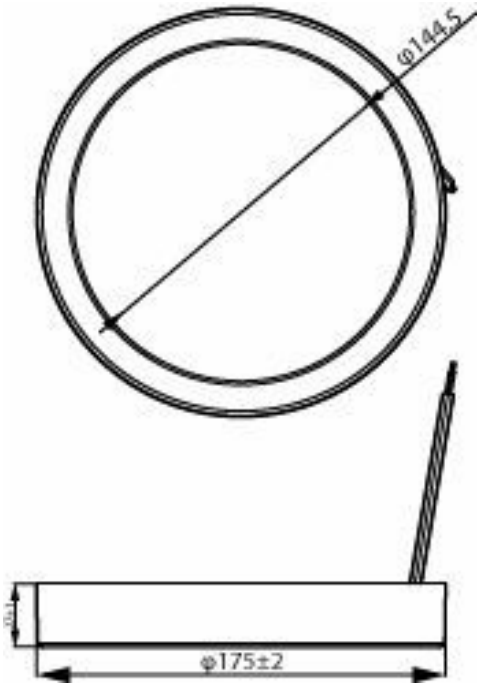

DN027C G3 LED12/NW 12W 220-240V D175

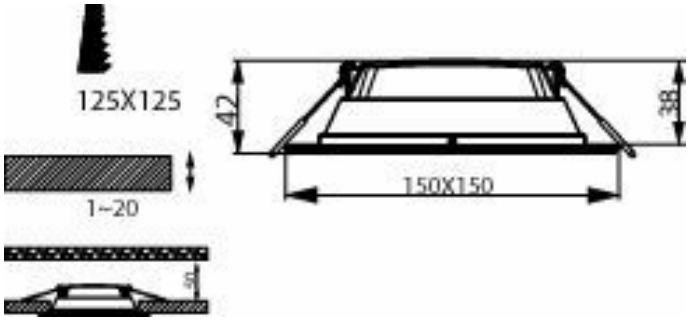

DN027B G3 LED9/WW 9W 220-240V L125 SQ

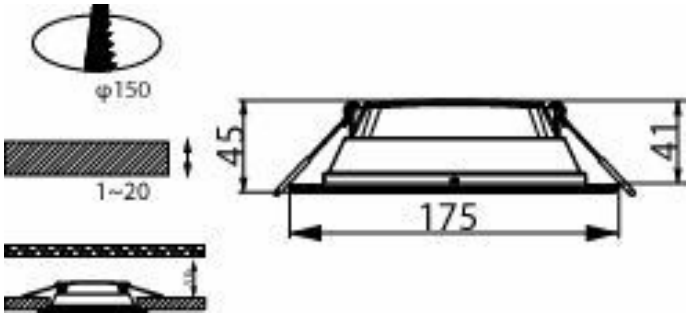

DN027B G3 LED12/NW 12W 220-240V D150 RU

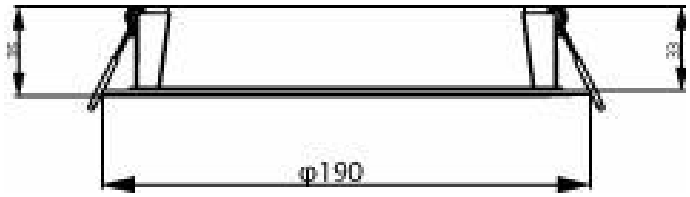

DN020B G4 LED15/CW 16W 220-240V D175

General Information

Light source replaceable	No
Number of gear units	1 unit
Driver included	Yes

Light Technical

Color rendering index (CRI)	80

Operating and Electrical

Input Voltage	220 to 240 V
Line Frequency	50 or 60 Hz
Protection class IEC	Safety class II

Controls and Dimming

Dimmable	No

Mechanical and Housing

Housing Color	White
Mech. impact protection code	IK03 [0.3 J]

Approval and Application

Glow-wire test	Temperature 650 °C, duration 30 s
Flammability mark	For mounting on normally flammable surfaces
Ambient temperature range	-20 to +40 °C

Initial Performance (IEC Compliant)

Luminous flux tolerance	+/-10%

Light Technical

Order Code	Full Product Name	Luminous Flux	Correlated Color Temperature (Nom)	Luminous Efficacy (rated) (Nom)	Optic type
929003269510	DN200 G3 LED3 830 3.5W D80 CN	280 lm	3000 K	80 lm/W	Matt optic decorative
929003269610	DN200 G3 LED3 840 3.5W D80 CN	300 lm	4000 K	85 lm/W	Matt optic decorative
929003269710	DN200 G3 LED3 865 3.5W D80 CN	300 lm	6500 K	85 lm/W	Matt optic decorative
929003269810	DN200 G3 LED4 830 4.5W D90 CN	380 lm	3000 K	84 lm/W	Matt optic decorative
929003269910	DN200 G3 LED4 840 4.5W D90 CN	400 lm	4000 K	88 lm/W	Matt optic decorative
929003270010	DN200 G3 LED4 865 4.5W D90 CN	400 lm	6500 K	88 lm/W	Matt optic decorative
929003270110	DN200 G3 LED6 830 6W D90 CN	550 lm	3000 K	91 lm/W	Matt optic decorative
929003270210	DN200 G3 LED6 840 6W D90 CN	600 lm	4000 K	100 lm/W	Matt optic decorative
929003270310	DN200 G3 LED6 865 6W D90 CN	600 lm	6500 K	100 lm/W	Matt optic decorative
929003270410	DN200 G3 LED6 830 7W D100 CN	550 lm	3000 K	78 lm/W	Matt optic decorative
929003270510	DN200 G3 LED6 840 7W D100 CN	600 lm	4000 K	85 lm/W	Matt optic decorative
929003270610	DN200 G3 LED6 865 7W D100 CN	600 lm	6500 K	85 lm/W	Matt optic decorative
929003270710	DN200 G3 LED6 830 6W D125 CN	550 lm	3000 K	91 lm/W	Matt optic decorative
929003270810	DN200 G3 LED6 840 6W D125 CN	600 lm	4000 K	100 lm/W	Matt optic decorative
929003270910	DN200 G3 LED6 865 6W D125 CN	600 lm	6500 K	100 lm/W	Matt optic decorative
929003271010	DN200 G3 LED9 830 10.5W D125 CN	850 lm	3000 K	80 lm/W	Matt optic decorative
929003271110	DN200 G3 LED9 840 10.5W D125 CN	900 lm	4000 K	85 lm/W	Matt optic decorative
929003271210	DN200 G3 LED9 865 10.5W D125 CN	900 lm	6500 K	85 lm/W	Matt optic decorative
929003271310	DN200 G3 LED9 830 9W D150 CN	850 lm	3000 K	94 lm/W	Matt optic decorative
929003271410	DN200 G3 LED9 840 9W D150 CN	900 lm	4000 K	100 lm/W	Matt optic decorative
929003271510	DN200 G3 LED9 865 9W D150 CN	900 lm	6500 K	100 lm/W	Matt optic decorative
929003271610	DN200 G3 LED12 830 13W D150 CN	1,150 lm	3000 K	88 lm/W	Matt optic decorative
929003271710	DN200 G3 LED12 840 13W D150 CN	1,200 lm	4000 K	92 lm/W	Matt optic decorative
929003271810	DN200 G3 LED12 865 13W D150 CN	1,200 lm	6500 K	92 lm/W	Matt optic decorative
929003271910	DN200 G3 LED15 830 16W D175 CN	1,450 lm	3000 K	90 lm/W	Matt optic decorative
929003272010	DN200 G3 LED15 840 16W D175 CN	1,500 lm	4000 K	93 lm/W	Matt optic decorative
929003272110	DN200 G3 LED15 865 16W D175 CN	1,500 lm	6500 K	93 lm/W	Matt optic decorative
929003272210	DN200 G3 LED20 830 20W D200 CN	1,900 lm	3000 K	95 lm/W	Matt optic decorative
929003272310	DN200 G3 LED20 840 20W D200 CN	2,000 lm	4000 K	100 lm/W	Matt optic decorative
929003272410	DN200 G3 LED20 865 20W D200 CN	2,000 lm	6500 K	100 lm/W	Matt optic decorative
929002674838	DN027B G3 LED6/WW 6W 220-240V L100 SQ	600 lm	3000 K	100.00 lm/W	Beam angle 110°
929002675138	DN027B G3 LED9/WW 9W 220-240V L125 SQ	900 lm	3000 K	100.00 lm/W	Beam angle 110°
929002675238	DN027B G3 LED9/NW 9W 220-240V L125 SQ	950 lm	4000 K	105.00 lm/W	Beam angle 110°
929002675338	DN027B G3 LED9/CW 9W 220-240V L125 SQ	950 lm	6500 K	105.00 lm/W	Beam angle 110°
929002675438	DN027B G3 LED12/WW 12W 220-240V L150 SQ	1,200 lm	3000 K	100.00 lm/W	Beam angle 110°

Order Code	Full Product Name	Luminous Flux	Correlated Color Temperature (Nom)	Luminous Efficacy (rated) (Nom)	Optic type
929002675538	DN027B G3 LED12/NW 12W 220-240V L150 SQ	1,300 lm	4000 K	108.00 lm/W	Beam angle 110°
929002675638	DN027B G3 LED12/CW 12W 220-240V L150 SQ	1,300 lm	6500 K	108.00 lm/W	Beam angle 110°
929003278808	DN020B G4 LED6/CW 7W 220-240V D100	600 lm	6500 K	85 lm/W	Beam angle 110°
929003279217	DN020B G4 LED9/WW 10.5W 220-240V D125	850 lm	3000 K	80 lm/W	Beam angle 110°
929003279317	DN020B G4 LED9/NW 10.5W 220-240V D125	900 lm	4000 K	85 lm/W	Beam angle 110°
929003279417	DN020B G4 LED9/CW 10.5W 220-240V D125	900 lm	6500 K	85 lm/W	Beam angle 110°
929003279817	DN020B G4 LED12/WW 13W 220-240V D150	1,150 lm	3000 K	88 lm/W	Beam angle 110°
929003280017	DN020B G4 LED12/CW 13W 220-240V D150	1,200 lm	6500 K	92 lm/W	Beam angle 110°
929003280117	DN020B G4 LED15/WW 16W 220-240V D175	1,450 lm	3000 K	90 lm/W	Beam angle 110°
929003280217	DN020B G4 LED15/NW 16W 220-240V D175	1,500 lm	4000 K	93 lm/W	Beam angle 110°
929003280317	DN020B G4 LED15/CW 16W 220-240V D175	1,500 lm	6500 K	93 lm/W	Beam angle 110°
929003280417	DN020B G4 LED20/WW 20W 220-240V D200	1,900 lm	3000 K	95 lm/W	Beam angle 110°
929003280617	DN020B G4 LED20/CW 20W 220-240V D200	2,000 lm	6500 K	100 lm/W	Beam angle 110°
929002671502	DN027B G3 LED6/WW 6W 220-240V D90 RU	600 lm	3000 K	100.00 lm/W	Beam angle 110°
929002671538	DN027B G3 LED6/WW 6W 220-240V D90 RD	600 lm	3000 K	100.00 lm/W	Beam angle 110°
929002671602	DN027B G3 LED6/NW 6W 220-240V D90 RU	600 lm	4000 K	100.00 lm/W	Beam angle 110°
929002671638	DN027B G3 LED6/NW 6W 220-240V D90 RD	600 lm	4000 K	100.00 lm/W	Beam angle 110°
929002671738	DN027B G3 LED6/CW 6W 220-240V D90 RD	600 lm	6500 K	100.00 lm/W	Beam angle 110°
929002672138	DN027B G3 LED6/WW 6W 220-240V D100 RD	600 lm	3000 K	100.00 lm/W	Beam angle 110°
929002672238	DN027B G3 LED6/NW 6W 220-240V D100 RD	600 lm	4000 K	100.00 lm/W	Beam angle 110°
929002672338	DN027B G3 LED6/CW 6W 220-240V D100 RD	600 lm	6500 K	100.00 lm/W	Beam angle 110°
929002672738	DN027B G3 LED9/WW 9W 220-240V D125 RD	900 lm	3000 K	100.00 lm/W	Beam angle 110°
929002672802	DN027B G3 LED9/NW 9W 220-240V D125 RU	950 lm	4000 K	105.00 lm/W	Beam angle 110°
929002672838	DN027B G3 LED9/NW 9W 220-240V D125 RD	950 lm	4000 K	105.00 lm/W	Beam angle 110°
929002672902	DN027B G3 LED9/CW 9W 220-240V D125 RU	950 lm	6500 K	105.00 lm/W	Beam angle 110°
929002672938	DN027B G3 LED9/CW 9W 220-240V D125 RD	950 lm	6500 K	105.00 lm/W	Beam angle 110°
929002673338	DN027B G3 LED12/WW 12W 220-240V D150 RD	1,200 lm	3000 K	100.00 lm/W	Beam angle 110°
929002673402	DN027B G3 LED12/NW 12W 220-240V D150 RU	1,300 lm	4000 K	108.00 lm/W	Beam angle 110°
929002673438	DN027B G3 LED12/NW 12W 220-240V D150 RD	1,300 lm	4000 K	108.00 lm/W	Beam angle 110°
929002673538	DN027B G3 LED12/CW 12W 220-240V D150 RD	1,300 lm	6500 K	108.00 lm/W	Beam angle 110°
929002673938	DN027B G3 LED15/WW 15W 220-240 D175 RD	1,500 lm	3000 K	100.00 lm/W	Beam angle 110°
929002674002	DN027B G3 LED15/NW 15W 220V D175 RU	1,600 lm	4000 K	106.00 lm/W	Beam angle 110°
929002674038	DN027B G3 LED15/NW 15W 220-240 D175 RD	1,600 lm	4000 K	106.00 lm/W	Beam angle 110°
929002674102	DN027B G3 LED15/CW 15W 220V D175 RU	1,600 lm	6500 K	106.00 lm/W	Beam angle 110°
929002674138	DN027B G3 LED15/CW 15W 220-240 D175 RD	1,600 lm	6500 K	106.00 lm/W	Beam angle 110°
929002674538	DN027B G3 LED20/WW 19W 220-240V D200 RD	2,000 lm	3000 K	105.00 lm/W	Beam angle 110°
929002674602	DN027B G3 LED20/NW 19W 220-240V D200 RU	2,100 lm	4000 K	110.00 lm/W	Beam angle 110°
929002674638	DN027B G3 LED20/NW 19W 220-240V D200 RD	2,100 lm	4000 K	110.00 lm/W	Beam angle 110°
929002674738	DN027B G3 LED20/CW 19W 220-240V D200 RD	2,100 lm	6500 K	110.00 lm/W	Beam angle 110°
929002675738	DN027C G3 LED9/WW 9W 220-240V D150	900 lm	3000 K	100.00 lm/W	Beam angle 110°
929002675838	DN027C G3 LED9/NW 9W 220-240V D150	950 lm	4000 K	105.00 lm/W	Beam angle 110°
929002675938	DN027C G3 LED9/CW 9W 220-240V D150	950 lm	6500 K	105.00 lm/W	Beam angle 110°

Order Code	Full Product Name	Luminous Flux	Correlated Color Temper-ature (Nom)	Luminous Efficacy (rated) (Nom)	Optic type
929002676038	DN027C G3 LED12/WW 12W 220-240V D175	1,200 lm	3000 K	100.00 lm/W	Beam angle 110°
929002676138	DN027C G3 LED12/NW 12W 220-240V D175	1,300 lm	4000 K	108.00 lm/W	Beam angle 110°
929002676238	DN027C G3 LED12/CW 12W 220-240V D175	1,300 lm	6500 K	108.00 lm/W	Beam angle 110°
929002676338	DN027C G3 LED15/WW 15W 220-240V D200	1,500 lm	3000 K	100.00 lm/W	Beam angle 110°
929002676438	DN027C G3 LED15/NW 15W 220-240V D200	1,600 lm	4000 K	106.00 lm/W	Beam angle 110°
929002676538	DN027C G3 LED15/CW 15W 220-240V D200	1,600 lm	6500 K	106.00 lm/W	Beam angle 110°
929002676638	DN027C G3 LED20/WW 19W 220-240V D225	2,000 lm	3000 K	105.00 lm/W	Beam angle 110°
929002676738	DN027C G3 LED20/NW 19W 220-240V D225	2,100 lm	4000 K	110.00 lm/W	Beam angle 110°
929002676838	DN027C G3 LED20/CW 19W 220-240V D225	2,100 lm	6500 K	110.00 lm/W	Beam angle 110°
929002677040	DN500B G3 LED6/NW 6W 220V D90 RD	600 lm	4000 K	100.00 lm/W	Beam angle 110°
929002677140	DN500B G3 LED6/CW 6W 220V D90 RD	600 lm	6500 K	100.00 lm/W	Beam angle 110°
929002677340	DN500B G3 LED9/NW 9W 220V D125 RD	950 lm	4000 K	105.00 lm/W	Beam angle 110°
929002677440	DN500B G3 LED9/CW 9W 220V D125 RD	950 lm	6500 K	105.00 lm/W	Beam angle 110°
929002677640	DN500B G3 LED12/NW 12W 220V D150 RD	1,300 lm	4000 K	108.00 lm/W	Beam angle 110°
929002677740	DN500B G3 LED12/CW 12W 220V D150 RD	1,300 lm	6500 K	108.00 lm/W	Beam angle 110°

Operating and Electrical

Order Code	Full Product Name	Power Consumption	Suitable for random switching
929003269510	DN200 G3 LED3 830 3.5W D80 CN	3.5 W	Not applicable
929003269610	DN200 G3 LED3 840 3.5W D80 CN	3.5 W	Not applicable
929003269710	DN200 G3 LED3 865 3.5W D80 CN	3.5 W	Not applicable
929003269810	DN200 G3 LED4 830 4.5W D90 CN	4.5 W	Not applicable
929003269910	DN200 G3 LED4 840 4.5W D90 CN	4.5 W	Not applicable
929003270010	DN200 G3 LED4 865 4.5W D90 CN	4.5 W	Not applicable
929003270110	DN200 G3 LED6 830 6W D90 CN	6 W	Not applicable
929003270210	DN200 G3 LED6 840 6W D90 CN	6 W	Not applicable
929003270310	DN200 G3 LED6 865 6W D90 CN	6 W	Not applicable
929003270410	DN200 G3 LED6 830 7W D100 CN	7 W	Not applicable
929003270510	DN200 G3 LED6 840 7W D100 CN	7 W	Not applicable
929003270610	DN200 G3 LED6 865 7W D100 CN	7 W	Not applicable
929003270710	DN200 G3 LED6 830 6W D125 CN	6 W	Not applicable
929003270810	DN200 G3 LED6 840 6W D125 CN	6 W	Not applicable
929003270910	DN200 G3 LED6 865 6W D125 CN	6 W	Not applicable
929003271010	DN200 G3 LED9 830 10.5W D125 CN	10.5 W	Not applicable
929003271110	DN200 G3 LED9 840 10.5W D125 CN	10.5 W	Not applicable
929003271210	DN200 G3 LED9 865 10.5W D125 CN	10.5 W	Not applicable
929003271310	DN200 G3 LED9 830 9W D150 CN	9 W	Not applicable
929003271410	DN200 G3 LED9 840 9W D150 CN	9 W	Not applicable
929003271510	DN200 G3 LED9 865 9W D150 CN	9 W	Not applicable
929003271610	DN200 G3 LED12 830 13W D150 CN	13 W	Not applicable
929003271710	DN200 G3 LED12 840 13W D150 CN	13 W	Not applicable

Order Code	Full Product Name	Power Consumption	Suitable for random switching
929003271810	DN200 G3 LED12 865 13W D150 CN	13 W	Not applicable
929003271910	DN200 G3 LED15 830 16W D175 CN	16 W	Not applicable
929003272010	DN200 G3 LED15 840 16W D175 CN	16 W	Not applicable
929003272110	DN200 G3 LED15 865 16W D175 CN	16 W	Not applicable
929003272210	DN200 G3 LED20 830 20W D200 CN	20 W	Not applicable
929003272310	DN200 G3 LED20 840 20W D200 CN	20 W	Not applicable
929003272410	DN200 G3 LED20 865 20W D200 CN	20 W	Not applicable
929002674838	DN027B G3 LED6/WW 6W 220-240V L100 SQ	6 W	No
929002675138	DN027B G3 LED9/WW 9W 220-240V L125 SQ	9 W	No
929002675238	DN027B G3 LED9/NW 9W 220-240V L125 SQ	9 W	No
929002675338	DN027B G3 LED9/CW 9W 220-240V L125 SQ	9 W	No
929002675438	DN027B G3 LED12/WW 12W 220-240V L150 SQ	12 W	No
929002675538	DN027B G3 LED12/NW 12W 220-240V L150 SQ	12 W	No
929002675638	DN027B G3 LED12/CW 12W 220-240V L150 SQ	12 W	No
929003278808	DN020B G4 LED6/CW 7W 220-240V D100	7 W	Not applicable
929003279217	DN020B G4 LED9/WW 10.5W 220-240V D125	10.5 W	Not applicable
929003279317	DN020B G4 LED9/NW 10.5W 220-240V D125	10.5 W	Not applicable
929003279417	DN020B G4 LED9/CW 10.5W 220-240V D125	10.5 W	Not applicable
929003279817	DN020B G4 LED12/WW 13W 220-240V D150	13 W	Not applicable
929003280017	DN020B G4 LED12/CW 13W 220-240V D150	13 W	Not applicable
929003280117	DN020B G4 LED15/WW 16W 220-240V D175	16 W	Not applicable
929003280217	DN020B G4 LED15/NW 16W 220-240V D175	16 W	Not applicable
929003280317	DN020B G4 LED15/CW 16W 220-240V D175	16 W	Not applicable
929003280417	DN020B G4 LED20/WW 20W 220-240V D200	20 W	Not applicable
929003280617	DN020B G4 LED20/CW 20W 220-240V D200	20 W	Not applicable
929002671502	DN027B G3 LED6/WW 6W 220-240V D90 RU	6 W	No
929002671538	DN027B G3 LED6/WW 6W 220-240V D90 RD	6 W	No
929002671602	DN027B G3 LED6/NW 6W 220-240V D90 RU	6 W	No
929002671638	DN027B G3 LED6/NW 6W 220-240V D90 RD	6 W	No
929002671738	DN027B G3 LED6/CW 6W 220-240V D90 RD	6 W	No
929002672138	DN027B G3 LED6/WW 6W 220-240V D100 RD	6 W	No
929002672238	DN027B G3 LED6/NW 6W 220-240V D100 RD	6 W	No
929002672338	DN027B G3 LED6/CW 6W 220-240V D100 RD	6 W	No
929002672738	DN027B G3 LED9/WW 9W 220-240V D125 RD	9 W	No
929002672802	DN027B G3 LED9/NW 9W 220-240V D125 RU	9 W	No
929002672838	DN027B G3 LED9/NW 9W 220-240V D125 RD	9 W	No
929002672902	DN027B G3 LED9/CW 9W 220-240V D125 RU	9 W	No
929002672938	DN027B G3 LED9/CW 9W 220-240V D125 RD	9 W	No
929002673338	DN027B G3 LED12/WW 12W 220-240V D150 RD	12 W	No
929002673402	DN027B G3 LED12/NW 12W 220-240V D150 RU	12 W	No
929002673438	DN027B G3 LED12/NW 12W 220-240V D150 RD	12 W	No
929002673538	DN027B G3 LED12/CW 12W 220-240V D150 RD	12 W	No

Order Code	Full Product Name	Power Consumption	Suitable for random switching
929002673938	DN027B G3 LED15/WW 15W 220-240 D175 RD	15 W	No
929002674002	DN027B G3 LED15/NW 15W 220V D175 RU	15 W	No
929002674038	DN027B G3 LED15/NW 15W 220-240 D175 RD	15 W	No
929002674102	DN027B G3 LED15/CW 15W 220V D175 RU	15 W	No
929002674138	DN027B G3 LED15/CW 15W 220-240 D175 RD	15 W	No
929002674538	DN027B G3 LED20/WW 19W 220-240V D200 RD	19 W	No
929002674602	DN027B G3 LED20/NW 19W 220-240V D200 RU	19 W	No
929002674638	DN027B G3 LED20/NW 19W 220-240V D200 RD	19 W	No
929002674738	DN027B G3 LED20/CW 19W 220-240V D200 RD	19 W	No
929002675738	DN027C G3 LED9/WW 9W 220-240V D150	9 W	No
929002675838	DN027C G3 LED9/NW 9W 220-240V D150	9 W	No
929002675938	DN027C G3 LED9/CW 9W 220-240V D150	9 W	No
929002676038	DN027C G3 LED12/WW 12W 220-240V D175	12 W	No
929002676138	DN027C G3 LED12/NW 12W 220-240V D175	12 W	No
929002676238	DN027C G3 LED12/CW 12W 220-240V D175	12 W	No
929002676338	DN027C G3 LED15/WW 15W 220-240V D200	15 W	No
929002676438	DN027C G3 LED15/NW 15W 220-240V D200	15 W	No
929002676538	DN027C G3 LED15/CW 15W 220-240V D200	15 W	No
929002676638	DN027C G3 LED20/WW 19W 220-240V D225	19 W	No
929002676738	DN027C G3 LED20/NW 19W 220-240V D225	19 W	No
929002676838	DN027C G3 LED20/CW 19W 220-240V D225	19 W	No
929002677040	DN500B G3 LED6/NW 6W 220V D90 RD	6 W	No
929002677140	DN500B G3 LED6/CW 6W 220V D90 RD	6 W	No
929002677340	DN500B G3 LED9/NW 9W 220V D125 RD	9 W	No
929002677440	DN500B G3 LED9/CW 9W 220V D125 RD	9 W	No
929002677640	DN500B G3 LED12/NW 12W 220V D150 RD	12 W	No
929002677740	DN500B G3 LED12/CW 12W 220V D150 RD	12 W	No

Mechanical and Housing

Order Code	Full Product Name	Ingress protection code
929003269510	DN200 G3 LED3 830 3.5W D80 CN	IP20
929003269610	DN200 G3 LED3 840 3.5W D80 CN	IP20
929003269710	DN200 G3 LED3 865 3.5W D80 CN	IP20
929003269810	DN200 G3 LED4 830 4.5W D90 CN	IP20
929003269910	DN200 G3 LED4 840 4.5W D90 CN	IP20
929003270010	DN200 G3 LED4 865 4.5W D90 CN	IP20
929003270110	DN200 G3 LED6 830 6W D90 CN	IP20
929003270210	DN200 G3 LED6 840 6W D90 CN	IP20
929003270310	DN200 G3 LED6 865 6W D90 CN	IP20
929003270410	DN200 G3 LED6 830 7W D100 CN	IP20
929003270510	DN200 G3 LED6 840 7W D100 CN	IP20

Order Code	Full Product Name	Ingress protection code
929003270610	DN200 G3 LED6 865 7W D100 CN	IP20
929003270710	DN200 G3 LED6 830 6W D125 CN	IP20
929003270810	DN200 G3 LED6 840 6W D125 CN	IP20
929003270910	DN200 G3 LED6 865 6W D125 CN	IP20
929003271010	DN200 G3 LED9 830 10.5W D125 CN	IP20
929003271110	DN200 G3 LED9 840 10.5W D125 CN	IP20
929003271210	DN200 G3 LED9 865 10.5W D125 CN	IP20
929003271310	DN200 G3 LED9 830 9W D150 CN	IP20
929003271410	DN200 G3 LED9 840 9W D150 CN	IP20
929003271510	DN200 G3 LED9 865 9W D150 CN	IP20
929003271610	DN200 G3 LED12 830 13W D150 CN	IP20
929003271710	DN200 G3 LED12 840 13W D150 CN	IP20
929003271810	DN200 G3 LED12 865 13W D150 CN	IP20
929003271910	DN200 G3 LED15 830 16W D175 CN	IP20
929003272010	DN200 G3 LED15 840 16W D175 CN	IP20
929003272110	DN200 G3 LED15 865 16W D175 CN	IP20
929003272210	DN200 G3 LED20 830 20W D200 CN	IP20
929003272310	DN200 G3 LED20 840 20W D200 CN	IP20
929003272410	DN200 G3 LED20 865 20W D200 CN	IP20
929002674838	DN027B G3 LED6/WW 6W 220-240V L100 SQ	IP20/40
929002675138	DN027B G3 LED9/WW 9W 220-240V L125 SQ	IP20/40
929002675238	DN027B G3 LED9/NW 9W 220-240V L125 SQ	IP20/40
929002675338	DN027B G3 LED9/CW 9W 220-240V L125 SQ	IP20/40
929002675438	DN027B G3 LED12/WW 12W 220-240V L150 SQ	IP20/40
929002675538	DN027B G3 LED12/NW 12W 220-240V L150 SQ	IP20/40
929002675638	DN027B G3 LED12/CW 12W 220-240V L150 SQ	IP20/40
929003278808	DN020B G4 LED6/CW 7W 220-240V D100	IP20
929003279217	DN020B G4 LED9/WW 10.5W 220-240V D125	IP20
929003279317	DN020B G4 LED9/NW 10.5W 220-240V D125	IP20
929003279417	DN020B G4 LED9/CW 10.5W 220-240V D125	IP20
929003279817	DN020B G4 LED12/WW 13W 220-240V D150	IP20
929003280017	DN020B G4 LED12/CW 13W 220-240V D150	IP20
929003280117	DN020B G4 LED15/WW 16W 220-240V D175	IP20
929003280217	DN020B G4 LED15/NW 16W 220-240V D175	IP20
929003280317	DN020B G4 LED15/CW 16W 220-240V D175	IP20
929003280417	DN020B G4 LED20/WW 20W 220-240V D200	IP20
929003280617	DN020B G4 LED20/CW 20W 220-240V D200	IP20
929002671502	DN027B G3 LED6/WW 6W 220-240V D90 RU	IP20/40
929002671538	DN027B G3 LED6/WW 6W 220-240V D90 RD	IP20/40
929002671602	DN027B G3 LED6/NW 6W 220-240V D90 RU	IP20/40
929002671638	DN027B G3 LED6/NW 6W 220-240V D90 RD	IP20/40
929002671738	DN027B G3 LED6/CW 6W 220-240V D90 RD	IP20/40

Order Code	Full Product Name	Ingress protection code
929002672138	DN027B G3 LED6/WW 6W 220-240V D100 RD	IP20/40
929002672238	DN027B G3 LED6/NW 6W 220-240V D100 RD	IP20/40
929002672338	DN027B G3 LED6/CW 6W 220-240V D100 RD	IP20/40
929002672738	DN027B G3 LED9/WW 9W 220-240V D125 RD	IP20/40
929002672802	DN027B G3 LED9/NW 9W 220-240V D125 RU	IP20/40
929002672838	DN027B G3 LED9/NW 9W 220-240V D125 RD	IP20/40
929002672902	DN027B G3 LED9/CW 9W 220-240V D125 RU	IP20/40
929002672938	DN027B G3 LED9/CW 9W 220-240V D125 RD	IP20/40
929002673338	DN027B G3 LED12/WW 12W 220-240V D150 RD	IP20/40
929002673402	DN027B G3 LED12/NW 12W 220-240V D150 RU	IP20/40
929002673438	DN027B G3 LED12/NW 12W 220-240V D150 RD	IP20/40
929002673538	DN027B G3 LED12/CW 12W 220-240V D150 RD	IP20/40
929002673938	DN027B G3 LED15/WW 15W 220-240 D175 RD	IP20/40
929002674002	DN027B G3 LED15/NW 15W 220V D175 RU	IP20/40
929002674038	DN027B G3 LED15/NW 15W 220-240 D175 RD	IP20/40
929002674102	DN027B G3 LED15/CW 15W 220V D175 RU	IP20/40
929002674138	DN027B G3 LED15/CW 15W 220-240 D175 RD	IP20/40
929002674538	DN027B G3 LED20/WW 19W 220-240V D200 RD	IP20/40
929002674602	DN027B G3 LED20/NW 19W 220-240V D200 RU	IP20/40
929002674638	DN027B G3 LED20/NW 19W 220-240V D200 RD	IP20/40
929002674738	DN027B G3 LED20/CW 19W 220-240V D200 RD	IP20/40
929002675738	DN027C G3 LED9/WW 9W 220-240V D150	IP20/40
929002675838	DN027C G3 LED9/NW 9W 220-240V D150	IP20/40
929002675938	DN027C G3 LED9/CW 9W 220-240V D150	IP20/40
929002676038	DN027C G3 LED12/WW 12W 220-240V D175	IP20/40
929002676138	DN027C G3 LED12/NW 12W 220-240V D175	IP20/40
929002676238	DN027C G3 LED12/CW 12W 220-240V D175	IP20/40
929002676338	DN027C G3 LED15/WW 15W 220-240V D200	IP20/40
929002676438	DN027C G3 LED15/NW 15W 220-240V D200	IP20/40
929002676538	DN027C G3 LED15/CW 15W 220-240V D200	IP20/40
929002676638	DN027C G3 LED20/WW 19W 220-240V D225	IP20/40
929002676738	DN027C G3 LED20/NW 19W 220-240V D225	IP20/40
929002676838	DN027C G3 LED20/CW 19W 220-240V D225	IP20/40
929002677040	DN500B G3 LED6/NW 6W 220V D90 RD	IP20/40
929002677140	DN500B G3 LED6/CW 6W 220V D90 RD	IP20/40
929002677340	DN500B G3 LED9/NW 9W 220V D125 RD	IP20/40
929002677440	DN500B G3 LED9/CW 9W 220V D125 RD	IP20/40
929002677640	DN500B G3 LED12/NW 12W 220V D150 RD	IP20/40
929002677740	DN500B G3 LED12/CW 12W 220V D150 RD	IP20/40

Initial Performance (IEC Compliant)

Order Code	Full Product Name	Initial chromaticity
929003269510	DN200 G3 LED3 830 3.5W D80 CN	(X=, 0.4377 ; Y=, 0.4055) 5SDCM
929003269610	DN200 G3 LED3 840 3.5W D80 CN	(X=, 0.3863 ; Y=, 0.3863) 5SDCM
929003269710	DN200 G3 LED3 865 3.5W D80 CN	(X=, 0.3115 ; Y=, 0.3258) 5SDCM
929003269810	DN200 G3 LED4 830 4.5W D90 CN	(X=, 0.4377 ; Y=, 0.4055) 5SDCM
929003269910	DN200 G3 LED4 840 4.5W D90 CN	(X=, 0.3863 ; Y=, 0.3863) 5SDCM
929003270010	DN200 G3 LED4 865 4.5W D90 CN	(X=, 0.3115 ; Y=, 0.3258) 5SDCM
929003270110	DN200 G3 LED6 830 6W D90 CN	(X=, 0.4377 ; Y=, 0.4055) 5SDCM
929003270210	DN200 G3 LED6 840 6W D90 CN	(X=, 0.3863 ; Y=, 0.3863) 5SDCM
929003270310	DN200 G3 LED6 865 6W D90 CN	(X=, 0.3115 ; Y=, 0.3258) 5SDCM
929003270410	DN200 G3 LED6 830 7W D100 CN	(X=, 0.4377 ; Y=, 0.4055) 5SDCM
929003270510	DN200 G3 LED6 840 7W D100 CN	(X=, 0.3863 ; Y=, 0.3863) 5SDCM
929003270610	DN200 G3 LED6 865 7W D100 CN	(X=, 0.3115 ; Y=, 0.3258) 5SDCM
929003270710	DN200 G3 LED6 830 6W D125 CN	(X=, 0.4377 ; Y=, 0.4055) 5SDCM
929003270810	DN200 G3 LED6 840 6W D125 CN	(X=, 0.3863 ; Y=, 0.3863) 5SDCM
929003270910	DN200 G3 LED6 865 6W D125 CN	(X=, 0.3115 ; Y=, 0.3258) 5SDCM
929003271010	DN200 G3 LED9 830 10.5W D125 CN	(X=, 0.4377 ; Y=, 0.4055) 5SDCM
929003271110	DN200 G3 LED9 840 10.5W D125 CN	(X=, 0.3863 ; Y=, 0.3863) 5SDCM
929003271210	DN200 G3 LED9 865 10.5W D125 CN	(X=, 0.3115 ; Y=, 0.3258) 5SDCM
929003271310	DN200 G3 LED9 830 9W D150 CN	(X=, 0.4377 ; Y=, 0.4055) 5SDCM
929003271410	DN200 G3 LED9 840 9W D150 CN	(X=, 0.3863 ; Y=, 0.3863) 5SDCM
929003271510	DN200 G3 LED9 865 9W D150 CN	(X=, 0.3115 ; Y=, 0.3258) 5SDCM
929003271610	DN200 G3 LED12 830 13W D150 CN	(X=, 0.4377 ; Y=, 0.4055) 5SDCM
929003271710	DN200 G3 LED12 840 13W D150 CN	(X=, 0.3863 ; Y=, 0.3863) 5SDCM
929003271810	DN200 G3 LED12 865 13W D150 CN	(X=, 0.3115 ; Y=, 0.3258) 5SDCM
929003271910	DN200 G3 LED15 830 16W D175 CN	(X=, 0.4377 ; Y=, 0.4055) 5SDCM
929003272010	DN200 G3 LED15 840 16W D175 CN	(X=, 0.3863 ; Y=, 0.3863) 5SDCM
929003272110	DN200 G3 LED15 865 16W D175 CN	(X=, 0.3115 ; Y=, 0.3258) 5SDCM
929003272210	DN200 G3 LED20 830 20W D200 CN	(X=, 0.4377 ; Y=, 0.4055) 5SDCM
929003272310	DN200 G3 LED20 840 20W D200 CN	(X=, 0.3863 ; Y=, 0.3863) 5SDCM
929003272410	DN200 G3 LED20 865 20W D200 CN	(X=, 0.3115 ; Y=, 0.3258) 5SDCM
929002674838	DN027B G3 LED6/WW 6W 220-240V L100 SQ	(IEC3000K, 0.44, 0.403) < 5SDCM
929002675138	DN027B G3 LED9/WW 9W 220-240V L125 SQ	(IEC3000K, 0.44, 0.403) < 5SDCM
929002675238	DN027B G3 LED9/NW 9W 220-240V L125 SQ	(IEC4000K, 0.38, 0.38) < 5SDCM
929002675338	DN027B G3 LED9/CW 9W 220-240V L125 SQ	(IEC6500K, 0.313, 0.337) < 5SDCM
929002675438	DN027B G3 LED12/WW 12W 220-240V L150 SQ	(IEC3000K, 0.44, 0.403) < 5SDCM
929002675538	DN027B G3 LED12/NW 12W 220-240V L150 SQ	(IEC4000K, 0.38, 0.38) < 5SDCM
929002675638	DN027B G3 LED12/CW 12W 220-240V L150 SQ	(IEC6500K, 0.313, 0.337) < 5SDCM
929003278808	DN020B G4 LED6/CW 7W 220-240V D100	(X=, 0.3139 ; Y=, 0.3326) 5SDCM
929003279217	DN020B G4 LED9/WW 10.5W 220-240V D125	(X=, 0.4377 ; Y=, 0.4055) 5SDCM
929003279317	DN020B G4 LED9/NW 10.5W 220-240V D125	(X=, 0.3839 ; Y=, 0.3843) 5SDCM
929003279417	DN020B G4 LED9/CW 10.5W 220-240V D125	(X=, 0.3117 ; Y=, 0.3273) 5SDCM

Order Code	Full Product Name	Initial chromaticity
929003279817	DN020B G4 LED12/WW 13W 220-240V D150	(X=, 0.4377 ; Y=, 0.4055) 5SDCM
929003280017	DN020B G4 LED12/CW 13W 220-240V D150	(X=, 0.3117 ; Y=, 0.3273) 5SDCM
929003280117	DN020B G4 LED15/WW 16W 220-240V D175	(X=, 0.4377 ; Y=, 0.4055) 5SDCM
929003280217	DN020B G4 LED15/NW 16W 220-240V D175	(X=, 0.3839 ; Y=, 0.3843) 5SDCM
929003280317	DN020B G4 LED15/CW 16W 220-240V D175	(X=, 0.3117 ; Y=, 0.3273) 5SDCM
929003280417	DN020B G4 LED20/WW 20W 220-240V D200	(X=, 0.4377 ; Y=, 0.4055) 5SDCM
929003280617	DN020B G4 LED20/CW 20W 220-240V D200	(X=, 0.3117 ; Y=, 0.3273) 5SDCM
929002671502	DN027B G3 LED6/WW 6W 220-240V D90 RU	(IEC3000K, 0.44, 0.403) < 5SDCM
929002671538	DN027B G3 LED6/WW 6W 220-240V D90 RD	(IEC3000K, 0.44, 0.403) < 5SDCM
929002671602	DN027B G3 LED6/NW 6W 220-240V D90 RU	(IEC4000K, 0.38, 0.38) < 5SDCM
929002671638	DN027B G3 LED6/NW 6W 220-240V D90 RD	(IEC4000K, 0.38, 0.38) < 5SDCM
929002671738	DN027B G3 LED6/CW 6W 220-240V D90 RD	(IEC6500K, 0.313, 0.337) < 5SDCM
929002672138	DN027B G3 LED6/WW 6W 220-240V D100 RD	(IEC3000K, 0.44, 0.403) < 5SDCM
929002672238	DN027B G3 LED6/NW 6W 220-240V D100 RD	(IEC4000K, 0.38, 0.38) < 5SDCM
929002672338	DN027B G3 LED6/CW 6W 220-240V D100 RD	(IEC6500K, 0.313, 0.337) < 5SDCM
929002672738	DN027B G3 LED9/WW 9W 220-240V D125 RD	(IEC3000K, 0.44, 0.403) < 5SDCM
929002672802	DN027B G3 LED9/NW 9W 220-240V D125 RU	(IEC4000K, 0.38, 0.38) < 5SDCM
929002672838	DN027B G3 LED9/NW 9W 220-240V D125 RD	(IEC4000K, 0.38, 0.38) < 5SDCM
929002672902	DN027B G3 LED9/CW 9W 220-240V D125 RU	(IEC6500K, 0.313, 0.337) < 5SDCM
929002672938	DN027B G3 LED9/CW 9W 220-240V D125 RD	(IEC6500K, 0.313, 0.337) < 5SDCM
929002673338	DN027B G3 LED12/WW 12W 220-240V D150 RD	(IEC3000K, 0.44, 0.403) < 5SDCM
929002673402	DN027B G3 LED12/NW 12W 220-240V D150 RU	(IEC4000K, 0.38, 0.38) < 5SDCM
929002673438	DN027B G3 LED12/NW 12W 220-240V D150 RD	(IEC4000K, 0.38, 0.38) < 5SDCM
929002673538	DN027B G3 LED12/CW 12W 220-240V D150 RD	(IEC6500K, 0.313, 0.337) < 5SDCM
929002673938	DN027B G3 LED15/WW 15W 220-240 D175 RD	(IEC3000K, 0.44, 0.403) < 5SDCM
929002674002	DN027B G3 LED15/NW 15W 220V D175 RU	(IEC4000K, 0.38, 0.38) < 5SDCM
929002674038	DN027B G3 LED15/NW 15W 220-240 D175 RD	(IEC4000K, 0.38, 0.38) < 5SDCM
929002674102	DN027B G3 LED15/CW 15W 220V D175 RU	(IEC6500K, 0.313, 0.337) < 5SDCM
929002674138	DN027B G3 LED15/CW 15W 220-240 D175 RD	(IEC6500K, 0.313, 0.337) < 5SDCM
929002674538	DN027B G3 LED20/WW 19W 220-240V D200 RD	(IEC3000K, 0.44, 0.403) < 5SDCM
929002674602	DN027B G3 LED20/NW 19W 220-240V D200 RU	(IEC4000K, 0.38, 0.38) < 5SDCM
929002674638	DN027B G3 LED20/NW 19W 220-240V D200 RD	(IEC4000K, 0.38, 0.38) < 5SDCM
929002674738	DN027B G3 LED20/CW 19W 220-240V D200 RD	(IEC6500K, 0.313, 0.337) < 5SDCM
929002675738	DN027C G3 LED9/WW 9W 220-240V D150	(IEC3000K, 0.44, 0.403) < 5SDCM
929002675838	DN027C G3 LED9/NW 9W 220-240V D150	(IEC4000K, 0.38, 0.38) < 5SDCM
929002675938	DN027C G3 LED9/CW 9W 220-240V D150	(IEC6500K, 0.313, 0.337) < 5SDCM
929002676038	DN027C G3 LED12/WW 12W 220-240V D175	(IEC3000K, 0.44, 0.403) < 5SDCM
929002676138	DN027C G3 LED12/NW 12W 220-240V D175	(IEC4000K, 0.38, 0.38) < 5SDCM
929002676238	DN027C G3 LED12/CW 12W 220-240V D175	(IEC6500K, 0.313, 0.337) < 5SDCM
929002676338	DN027C G3 LED15/WW 15W 220-240V D200	(IEC3000K, 0.44, 0.403) < 5SDCM
929002676438	DN027C G3 LED15/NW 15W 220-240V D200	(IEC4000K, 0.38, 0.38) < 5SDCM
929002676538	DN027C G3 LED15/CW 15W 220-240V D200	(IEC6500K, 0.313, 0.337) < 5SDCM

Order Code	Full Product Name	Initial chromaticity
929002676638	DN027C G3 LED20/WW 19W 220-240V D225	(IEC3000K, 0.44, 0.403) < 5SDCM
929002676738	DN027C G3 LED20/NW 19W 220-240V D225	(IEC4000K, 0.38, 0.38) < 5SDCM
929002676838	DN027C G3 LED20/CW 19W 220-240V D225	(IEC6500K, 0.313, 0.337) < 5SDCM
929002677040	DN500B G3 LED6/NW 6W 220V D90 RD	(IEC4000K, 0.38, 0.38) < 5SDCM
929002677140	DN500B G3 LED6/CW 6W 220V D90 RD	(IEC6500K, 0.313, 0.337) < 5SDCM
929002677340	DN500B G3 LED9/NW 9W 220V D125 RD	(IEC4000K, 0.38, 0.38) < 5SDCM
929002677440	DN500B G3 LED9/CW 9W 220V D125 RD	(IEC6500K, 0.313, 0.337) < 5SDCM
929002677640	DN500B G3 LED12/NW 12W 220V D150 RD	(IEC4000K, 0.38, 0.38) < 5SDCM
929002677740	DN500B G3 LED12/CW 12W 220V D150 RD	(IEC6500K, 0.313, 0.337) < 5SDCM

Over Time Performance (IEC Compliant)

Order Code	Full Product Name	Driver failure rate at 5000 h
929003269510	DN200 G3 LED3 830 3.5W D80 CN	1.2 %
929003269610	DN200 G3 LED3 840 3.5W D80 CN	1.2 %
929003269710	DN200 G3 LED3 865 3.5W D80 CN	1.2 %
929003269810	DN200 G3 LED4 830 4.5W D90 CN	1.2 %
929003269910	DN200 G3 LED4 840 4.5W D90 CN	1.2 %
929003270010	DN200 G3 LED4 865 4.5W D90 CN	1.2 %
929003270110	DN200 G3 LED6 830 6W D90 CN	1.2 %
929003270210	DN200 G3 LED6 840 6W D90 CN	1.2 %
929003270310	DN200 G3 LED6 865 6W D90 CN	1.2 %
929003270410	DN200 G3 LED6 830 7W D100 CN	1.2 %
929003270510	DN200 G3 LED6 840 7W D100 CN	1.2 %
929003270610	DN200 G3 LED6 865 7W D100 CN	1.2 %
929003270710	DN200 G3 LED6 830 6W D125 CN	1.2 %
929003270810	DN200 G3 LED6 840 6W D125 CN	1.2 %
929003270910	DN200 G3 LED6 865 6W D125 CN	1.2 %
929003271010	DN200 G3 LED9 830 10.5W D125 CN	1.2 %
929003271110	DN200 G3 LED9 840 10.5W D125 CN	1.2 %
929003271210	DN200 G3 LED9 865 10.5W D125 CN	1.2 %
929003271310	DN200 G3 LED9 830 9W D150 CN	1.2 %
929003271410	DN200 G3 LED9 840 9W D150 CN	1.2 %
929003271510	DN200 G3 LED9 865 9W D150 CN	1.2 %
929003271610	DN200 G3 LED12 830 13W D150 CN	1.2 %
929003271710	DN200 G3 LED12 840 13W D150 CN	1.2 %
929003271810	DN200 G3 LED12 865 13W D150 CN	1.2 %
929003271910	DN200 G3 LED15 830 16W D175 CN	1.2 %
929003272010	DN200 G3 LED15 840 16W D175 CN	1.2 %
929003272110	DN200 G3 LED15 865 16W D175 CN	1.2 %
929003272210	DN200 G3 LED20 830 20W D200 CN	1.2 %
929003272310	DN200 G3 LED20 840 20W D200 CN	1.2 %

Order Code	Full Product Name	Driver failure rate at 5000 h
929003272410	DN200 G3 LED20 865 20W D200 CN	1.2 %
929002674838	DN027B G3 LED6/WW 6W 220-240V L100 SQ	0.012 %
929002675138	DN027B G3 LED9/WW 9W 220-240V L125 SQ	0.012 %
929002675238	DN027B G3 LED9/NW 9W 220-240V L125 SQ	0.012 %
929002675338	DN027B G3 LED9/CW 9W 220-240V L125 SQ	0.012 %
929002675438	DN027B G3 LED12/WW 12W 220-240V L150 SQ	0.012 %
929002675538	DN027B G3 LED12/NW 12W 220-240V L150 SQ	0.012 %
929002675638	DN027B G3 LED12/CW 12W 220-240V L150 SQ	0.012 %
929003278808	DN020B G4 LED6/CW 7W 220-240V D100	1.2
929003279217	DN020B G4 LED9/WW 10.5W 220-240V D125	1.2
929003279317	DN020B G4 LED9/NW 10.5W 220-240V D125	1.2
929003279417	DN020B G4 LED9/CW 10.5W 220-240V D125	1.2
929003279817	DN020B G4 LED12/WW 13W 220-240V D150	1.2
929003280017	DN020B G4 LED12/CW 13W 220-240V D150	1.2
929003280117	DN020B G4 LED15/WW 16W 220-240V D175	1.2
929003280217	DN020B G4 LED15/NW 16W 220-240V D175	1.2
929003280317	DN020B G4 LED15/CW 16W 220-240V D175	1.2
929003280417	DN020B G4 LED20/WW 20W 220-240V D200	1.2
929003280617	DN020B G4 LED20/CW 20W 220-240V D200	1.2
929002671502	DN027B G3 LED6/WW 6W 220-240V D90 RU	0.012 %
929002671538	DN027B G3 LED6/WW 6W 220-240V D90 RD	0.012 %
929002671602	DN027B G3 LED6/NW 6W 220-240V D90 RU	0.012 %
929002671638	DN027B G3 LED6/NW 6W 220-240V D90 RD	0.012 %
929002671738	DN027B G3 LED6/CW 6W 220-240V D90 RD	0.012 %
929002672138	DN027B G3 LED6/WW 6W 220-240V D100 RD	0.012 %
929002672238	DN027B G3 LED6/NW 6W 220-240V D100 RD	0.012 %
929002672338	DN027B G3 LED6/CW 6W 220-240V D100 RD	0.012 %
929002672738	DN027B G3 LED9/WW 9W 220-240V D125 RD	0.012 %
929002672802	DN027B G3 LED9/NW 9W 220-240V D125 RU	0.012 %
929002672838	DN027B G3 LED9/NW 9W 220-240V D125 RD	0.012 %
929002672902	DN027B G3 LED9/CW 9W 220-240V D125 RU	0.012 %
929002672938	DN027B G3 LED9/CW 9W 220-240V D125 RD	0.012 %
929002673338	DN027B G3 LED12/WW 12W 220-240V D150 RD	0.012 %
929002673402	DN027B G3 LED12/NW 12W 220-240V D150 RU	0.012 %
929002673438	DN027B G3 LED12/NW 12W 220-240V D150 RD	0.012 %
929002673538	DN027B G3 LED12/CW 12W 220-240V D150 RD	0.012 %
929002673938	DN027B G3 LED15/WW 15W 220-240 D175 RD	0.012 %
929002674002	DN027B G3 LED15/NW 15W 220V D175 RU	0.012 %
929002674038	DN027B G3 LED15/NW 15W 220-240 D175 RD	0.012 %
929002674102	DN027B G3 LED15/CW 15W 220V D175 RU	0.012 %
929002674138	DN027B G3 LED15/CW 15W 220-240 D175 RD	0.012 %
929002674538	DN027B G3 LED20/WW 19W 220-240V D200 RD	0.012 %

Order Code	Full Product Name	Driver failure rate at 5000 h
929002674602	DN027B G3 LED20/NW 19W 220-240V D200 RU	0.012 %
929002674638	DN027B G3 LED20/NW 19W 220-240V D200 RD	0.012 %
929002674738	DN027B G3 LED20/CW 19W 220-240V D200 RD	0.012 %
929002675738	DN027C G3 LED9/WW 9W 220-240V D150	0.012 %
929002675838	DN027C G3 LED9/NW 9W 220-240V D150	0.012 %
929002675938	DN027C G3 LED9/CW 9W 220-240V D150	0.012 %
929002676038	DN027C G3 LED12/WW 12W 220-240V D175	0.012 %
929002676138	DN027C G3 LED12/NW 12W 220-240V D175	0.012 %
929002676238	DN027C G3 LED12/CW 12W 220-240V D175	0.012 %
929002676338	DN027C G3 LED15/WW 15W 220-240V D200	0.012 %
929002676438	DN027C G3 LED15/NW 15W 220-240V D200	0.012 %
929002676538	DN027C G3 LED15/CW 15W 220-240V D200	0.012 %
929002676638	DN027C G3 LED20/WW 19W 220-240V D225	0.012 %
929002676738	DN027C G3 LED20/NW 19W 220-240V D225	0.012 %
929002676838	DN027C G3 LED20/CW 19W 220-240V D225	0.012 %
929002677040	DN500B G3 LED6/NW 6W 220V D90 RD	0.012 %
929002677140	DN500B G3 LED6/CW 6W 220V D90 RD	0.012 %
929002677340	DN500B G3 LED9/NW 9W 220V D125 RD	0.012 %
929002677440	DN500B G3 LED9/CW 9W 220V D125 RD	0.012 %
929002677640	DN500B G3 LED12/NW 12W 220V D150 RD	0.012 %
929002677740	DN500B G3 LED12/CW 12W 220V D150 RD	0.012 %

© 2026 Signify Holding. All rights reserved. The information provided herein is subject to change, without notice. Signify does not give any representation or warranty as to the accuracy or completeness of the information included herein and shall not be liable for any action in reliance thereon. The information presented in this document is not intended as any commercial offer and does not form part of any quotation or contract, unless otherwise agreed by Signify. Philips and the Philips Shield Emblem are registered trademarks of Koninklijke Philips N.V.