PHILIPS

Ceramalux ALTO

D_CERALT



Energy efficiency and long life

These lamps pass the EPA's TCLP test for non-hazardous materials. Ideal for industrial applications, warehouses, post top applications and parking lots.

Benefits

- Low mercury - better for the environment.
- Long Life - 24,000 hours Rated Average Life.
- High efficacy up to 140 LPW.

Applications

- Ideal for street and roadway lighting, parking lots and garages, warehouses and manufacturing facilities where lower maintenance costs are desired.

Features

- Low total cost of ownership.
- Long life—up to 24,000 hours.
- High efficacy up to 140 LPW.
- ALTO® Lamp Technology - Sustainable solution.
- ED 18 Available in 200, 250 and 400 watt; ED-23 1/2 Available in 50, 70,100, and 150 watt

Versions



LPPR D-HPS-AL ED23 12 CL



LPPR D-HPS-AL E25 CL



LPPR D-HPS-AL ED-18 CL

Dimensional drawing

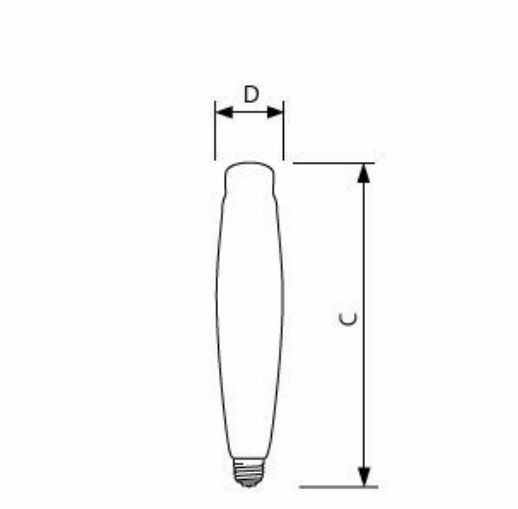

Product
C1000S52/ALTO

Product		
SON 100W E39 ED75 CL SL/12	75 mm	196 mm
SON 150W E39 ED75 CL SL/12		
SON 70W E39 ED75 CL SL/12		

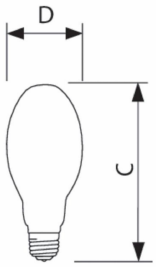

Product	D	C (max)
C200S66/ALTO 12PK		
SON 250W E39 ED58 CL SL/12	57.2 mm	248 mm
SON 400W E39 ED58 CL SL/12		

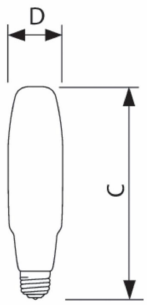

General Information

Cap-Base	E39 [Single Contact Mogul Screw]
Operating Position	UNIVERSAL [Any or Universal (U)]

Light Technical

Correlated Color Temperature (Nom)	2100 K

Mechanical and Housing

Bulb Finish	Clear
Bulb Material	Hard Glass

Approval and Application

Mercury (Hg) Content (Nom)	32 mg

Light Technical

Order Code	Full Product Name	Chromaticity Coordinate X (Nom)	Chromaticity Coordinate Y (Nom)	Luminous Efficacy (Rated) (Min)	Luminous Efficacy (rated) (Nom)	Color rendering index (CRI)
928601139790	SON 150W E39 ED75 CL SL/12	514	424	96 lm/W	106 lm/W	17
928601139890	SON 100W E39 ED75 CL SL/12	520	420	85 lm/W	94 lm/W	18
928601139990	SON 70W E39 ED75 CL SL/12	522	425	86 lm/W	94 lm/W	13
928601139205	C1000S52/ALTO	515	420	121.5 lm/W	135 lm/W	21
928601139391	SON 400W E39 ED58 CL SL/12	515	420	112.5 lm/W	125 lm/W	20
928601139490	SON 250W E39 ED58 CL SL/12	523	412	102 lm/W	114 lm/W	26
928601139590	C200S66/ALTO 12PK	521	420	104 lm/W	115 lm/W	16

Operating and Electrical

Order Code	Full Product Name	Power Consumption	Lamp Current (Nom)	Voltage (Nom)
928601139790	SON 150W E39 ED75 CL SL/12	150.6 W	3.2 A	55 V
928601139890	SON 100W E39 ED75 CL SL/12	100.4 W	2.1 A	55 V
928601139990	SON 70W E39 ED75 CL SL/12	70.2 W	1.6 A	52 V
928601139205	C1000S52/ALTO	1,003 W	4.7 A	250 V
928601139391	SON 400W E39 ED58 CL SL/12	401.5 W	4.6 A	100 V
928601139490	SON 250W E39 ED58 CL SL/12	251 W	3.0 A	95 V
928601139590	C200S66/ALTO 12PK	200.8 W	2.4 A	100 V

Mechanical and Housing

Order Code	Full Product Name	Bulb Shape
928601139790	SON 150W E39 ED75 CL SL/12	ED-23 1/2
928601139890	SON 100W E39 ED75 CL SL/12	ED-23 1/2
928601139990	SON 70W E39 ED75 CL SL/12	ED-23 1/2
928601139205	C1000S52/ALTO	E25
928601139391	SON 400W E39 ED58 CL SL/12	ED18
928601139490	SON 250W E39 ED58 CL SL/12	ED18
928601139590	C200S66/ALTO 12PK	ED18

Approval and Application

Order Code	Full Product Name	Mercury (Hg) Content (Max)
928601139790	SON 150W E39 ED75 CL SL/12	17 mg
928601139890	SON 100W E39 ED75 CL SL/12	22.1 mg
928601139990	SON 70W E39 ED75 CL SL/12	17 mg
928601139205	C1000S52/ALTO	-
928601139391	SON 400W E39 ED58 CL SL/12	23.5 mg
928601139490	SON 250W E39 ED58 CL SL/12	23.5 mg
928601139590	C200S66/ALTO 12PK	31 mg

© 2026 Signify Holding. All rights reserved. The information provided herein is subject to change, without notice. Signify does not give any representation or warranty as to the accuracy or completeness of the information included herein and shall not be liable for any action in reliance thereon. The information presented in this document is not intended as any commercial offer and does not form part of any quotation or contract, unless otherwise agreed by Signify. Philips and the Philips Shield Emblem are registered trademarks of Koninklijke Philips N.V.