PHILIPS

## MSR Gold™ FastFit

XDMSRGFF



# MSR Gold™ FastFit – easy lamp replacement in seconds

All lamps burn out eventually, but when this happens with single ended MSR Gold™ FastFit, it is replaced in seconds – thanks to the specially designed lamp base and lamp holder. This lamp provides a high beam intensity of pure, white light for a truly illuminating performance, while the gold-plated caps provide superior heat protection and prevent premature failure. P3 technology allows use in any position and at higher temperatures, further extending lamp life and consistency of high-quality light output. Also, because the FastFit design is applied to Philips Halogen lamps, switching between lamp technologies can be done quickly and easily. The Philips MSR GoldTM FastFit can be operated in a lamp wattage range between 700W and 2500W.

### Benefits

- Lamp replacement in just seconds, exchangeable with halogen lamp
- High beam intensity
- Easy handling, smaller and lighter fixtures possible
- Boostable light levels
- Enables use at higher temperatures in any burning position. Longer lifetime, fewer early failures, consistent performance over time
- Reduces early lamp or lamp holder failures. Excellent current transfer
- Pure, white light; color point close to black body line



Data subject to change

## Applications

- Entertainment

## Features

- Philips FastFit
- Very short arc
- Compact design
- Flexible power range
- Philips pinch protection
- Innovative gold plated pins
- MSR filling

- A lamp breaking is extremely unlikely to have any impact on your health. If a lamp breaks, ventilate the room for 30 minutes and remove the parts, preferably with gloves. Put them in a sealed plastic bag and take it to your local waste facilities for recycling. Do not use a vacuum cleaner.

## Versions



XPPR_XDMSR_0019-Product photo



XPPR_XDMSR_0021-Product photo

## Dimensional drawing

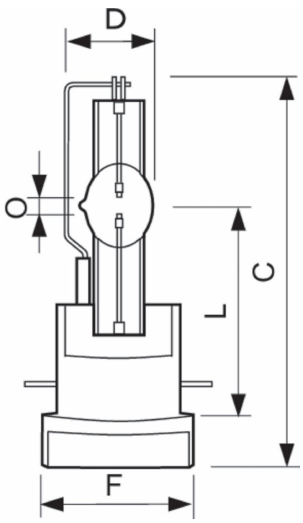


| Product | D (max) | O | L (min) | L (max) | L | C (max) | F |
|---|---|---|---|---|---|---|---|
| MSR Gold 1500 FastFit 1CT/4 | 28 mm | 6.3 mm | 64 mm | 66 mm | 65 mm | 128 mm | 50 mm |
| MSR Gold 1500/1 FastFit 1CT/4 | 28 mm | 6.3 mm | 64 mm | 66 mm | 65 mm | 128 mm | 50 mm |
| MSR Gold 2000 FastFit 1CT/8 | 34 mm | 8.0 mm | 66 mm | 68 mm | 67 mm | 134 mm | 50 mm |
| MSR Gold 2000/2 FastFit 1CT/8 | 34 mm | 8.0 mm | 66 mm | 68 mm | 67 mm | 134 mm | 50 mm |
| MSR Gold 2500/2 FastFit 1CT/4 | 35.5 mm | 9.5 mm | 73.9 mm | 75.9 mm | 74.9 mm | 153 mm | 50 mm |

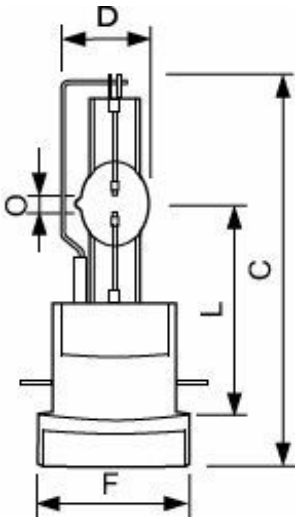


| Product | D (max) | O | L (min) | L (max) | L | C (max) | F |
|---|---|---|---|---|---|---|---|
| MSR Gold 1200 FastFit 1CT/4 | 26.1 mm | 5.5 mm | 64 mm | 66 mm | 65 mm | 128 mm | 50 mm |
| MSR Gold 700 FastFit 1CT/4 | 23.2 mm | 3.8 mm | 64 mm | 66 mm | 65 mm | 112 mm | 50 mm |
| MSR Gold 700/2 FastFit 1CT/8 | 23.2 mm | 3.8 mm | 64 mm | 66 mm | 65 mm | 112 mm | 50 mm |

### General Information

| | |
|---|---|
| Cap-Base | PGJX50 |
| Operating Position | UNIVERSAL [Any or Universal (U)] |

### Light Technical

| | |
|---|---|
| Luminous Flux (Min) | 162,000 lm |

### Controls and Dimming

| | |
|---|---|
| Dimmable | Yes |

## Light Technical

| Order Code | Full Product Name | Color Code | Luminous Flux | Correlated Color Temperature (Nom) | Color rendering index (CRI) |
|---|---|---|---|---|---|
| 928106105114 | MSR Gold 2000/2 FastFit 1CT/8 | 2 | 157,000 lm | 7500 K | 88 |
| 928106405115 | MSR Gold 2500/2 FastFit 1CT/4 | 2 | 195,500 lm | 7200 K | 88 |
| 928107305115 | MSR Gold 1500 FastFit 1CT/4 | - | 119,550 lm | 6000 K | 80 |
| 928108905115 | MSR Gold 1500/1 FastFit 1CT/4 | 1 | 127,500 lm | 5700 K | 85 |
| 928176905114 | MSR Gold 2000 FastFit 1CT/8 | - | 180,000 lm | 6050 K | 91 |
| 928106005115 | MSR Gold 700 FastFit 1CT/4 | - | 54,000 lm | 6000 K | 79 |
| 928106205114 | MSR Gold 700/2 FastFit 1CT/8 | 2 | 46,000 lm | 7500 K | 73 |
| 928175005115 | MSR Gold 1200 FastFit 1CT/4 | - | 92,000 lm | 6000 K | 80 |

## Operating and Electrical

| Order Code | Full Product Name | Power Consumption | Lamp Current (Nom) |
|---|---|---|---|
| 928106105114 | MSR Gold 2000/2 FastFit 1CT/8 | 2,000 W | 15.4 A |
| 928106405115 | MSR Gold 2500/2 FastFit 1CT/4 | 2,500 W | 19.53 A |
| 928107305115 | MSR Gold 1500 FastFit 1CT/4 | 1,500 W | 15.3 A |
| 928108905115 | MSR Gold 1500/1 FastFit 1CT/4 | 1,500.0 W | 15.3 A |
| 928176905114 | MSR Gold 2000 FastFit 1CT/8 | 2,000 W | 15.2 A |
| 928106005115 | MSR Gold 700 FastFit 1CT/4 | 700 W | 10.2 A |
| 928106205114 | MSR Gold 700/2 FastFit 1CT/8 | 700 W | 10.2 A |
| 928175005115 | MSR Gold 1200 FastFit 1CT/4 | 1,200 W | 15 A |

© 2026 Signify Holding. All rights reserved. The information provided herein is subject to change, without notice. Signify does not give any representation or warranty as to the accuracy or completeness of the information included herein and shall not be liable for any action in reliance thereon. The information presented in this document is not intended as any commercial offer and does not form part of any quotation or contract, unless otherwise agreed by Signify. Philips and the Philips Shield Emblem are registered trademarks of Koninklijke Philips N.V.