Signify

CityCharm poles and brackets

JDP490



CityCharm poles and brackets – combining ambiance and optimum performance

CityCharm is designed for use in urban areas where comfortable lighting, ambiance and design play an important role. Its unobtrusive appearance makes it a timeless, future-proof luminaire that is ideal for residential areas, parks, footpaths and cycle lanes, where visual comfort and maximum efficiency are key. CityCharm offers a choice of two iconic designs (Cordoba and Cone) and various accessories, enabling you to create a lighting solution that carries your signature, both by day and by night. CityCharm luminaires are also available as a complete set, with a choice of dedicated poles and brackets.

Benefits

- Elegant iconic range focused on comfortable lighting
- Future-proof due to excellent lighting performance and high quality of product and finishing
- Suitable for both renovation projects and new installations thanks to dedicated brackets and poles

Applications

- Residential areas
- Footpaths and cycle lanes
- Parks and boulevards

Features

- Choice of luminaire shapes, color effects, and dedicated poles and brackets
- Diffusing tools to create visual comfort and colored parts to enhance ambiance
- A broad lumen range and optics to ensure maximum efficiency at all lighting levels
- Optimized total cost of ownership
- Compatible with all standard and advanced Philips lighting systems and CityTouch Ready
- Easy on-site maintenance of the driver

Versions



CityCharm pole-mounting bracket JPP490 1 arm



OPAC JDP490i 0003-Accessory

Dimensional drawing

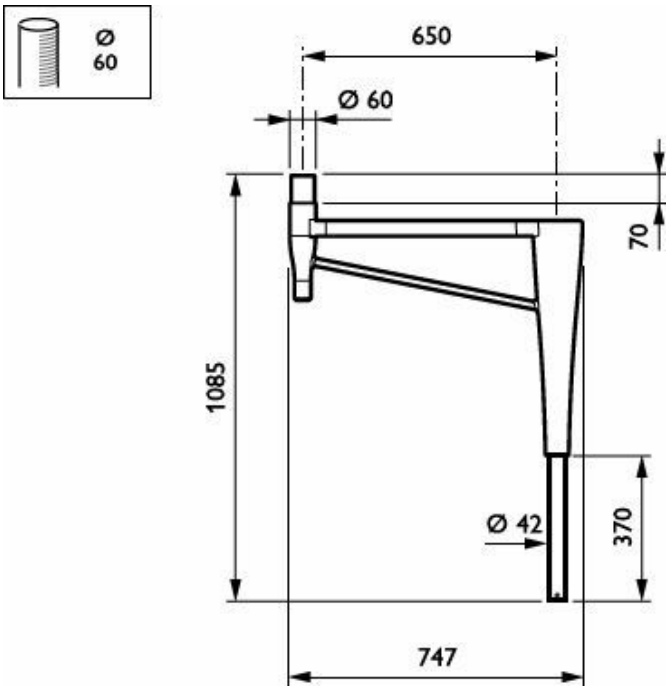

CITYCHARM BRACKETS - Pole-mounting bracket 1 arm - 650 mm - 60 mm - RAL color

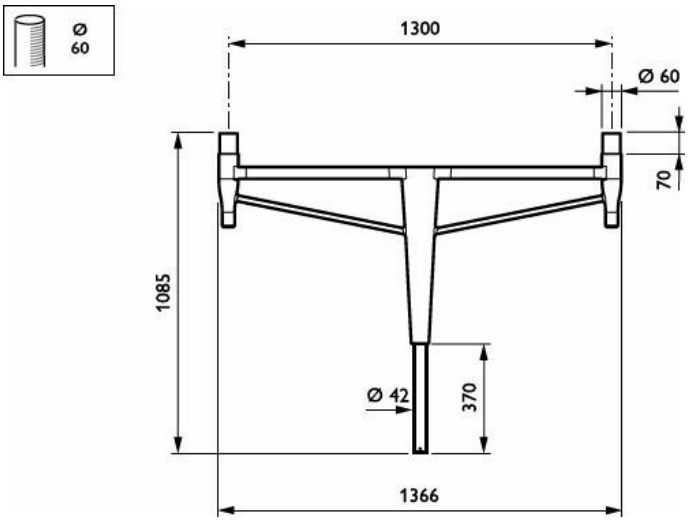

CITYCHARM BRACKETS - Pole-mounting bracket 2 arms 180° - 650 mm - 60 mm - RAL color

Approval and Application

CE mark	Yes

© 2026 Signify Holding. All rights reserved. The information provided herein is subject to change, without notice. Signify does not give any representation or warranty as to the accuracy or completeness of the information included herein and shall not be liable for any action in reliance thereon. The information presented in this document is not intended as any commercial offer and does not form part of any quotation or contract, unless otherwise agreed by Signify. All trademarks are owned by Signify Holding or their respective owners.