PHILIPS

DN145B LED10S/830_840 PSU WH

911401816185



Multi ColorTemp

Service tag

CoreLine SlimDownlight, All-in, 9.5 W, D155, 1080 lm, 1150 lm, 3000 K, 4000 K, Textured, IP20/44, EL-ready

D155, Aluminum die-cast, White, Signal white (RAL9003), Recessed, Power supply unit (On/Off), All-in, Multi Color Temperature, 1080 lm, 1150 lm, 9.5 W, 120 lm/W, 114 lm/W, 3000 K, 4000 K, (0.43,0.40) SDCM<3; (0.38,0.38) SDCM<3, Beam angle 90°, Symmetrical, Textured, Polycarbonate, IP20(IP44 front), IK03 | 0.3 J, Safety class II, Push-in connector 6-pole, Self-contained emergency lighting is possible when used with a compatible battery kit accessory

General Information

Number of gear units	1 unit
Driver included	Yes
Sustainability rating	Unclassified
Service tag	Yes
Mounting	Recessed
Value ladder	Performance
Warranty period	5 years

Light Technical

Luminous Flux	1,080 lm
Correlated Color Temperature (Nom)	3000 K
Luminous Efficacy (rated) (Nom)	120 lm/W
Color rendering index (CRI)	>80
Light source color	Multi Color Temperature
Optic type	Beam angle 90°

Luminaire light beam spread	90°
Unified glare rating CEN	28
All-in Type	All-in, Multi Color Temperature

Operating and Electrical

Input Voltage	220 to 240 V
Line Frequency	50 or 60 Hz
Average CLO power consumption	- W
Inrush current	5.7 A
Inrush time	0.3 ms
Power Consumption	9.5 W
Power Factor (Fraction)	0.9
Connection	Push-in connector 6-pole
Cable	-
Number of products on MCB of 16 A type B	65
Suitable for random switching	Yes
Protection class IEC	Safety class II
Total harmonic distortion	20 %

Controls and Dimming

Dimmable	No
Driver/power unit/transformer	Power supply unit (On/Off)
Control interface	-
Constant light output	No

Mechanical and Housing

Housing Material	Aluminum die-cast
Reflector material	Polycarbonate
Optic material	Polymethyl methacrylate
Optical cover material	Polycarbonate
Fixation material	-
Housing Color	White
Optical cover finish	Textured
Overall height	25 mm
Overall diameter	170 mm
Nominal Ceiling cut-out diameter	155 mm
Ingress protection code	IP20(IP44 front)
Mech. impact protection code	IK03 [0.3 J]
Mounting	Recessed
Net Weight (Piece)	0.300 kg

Emergency Operation

Central Emergency	No
Emergency lighting	Self-contained emergency lighting is possible when used with a compatible battery kit accessory

Approval and Application

Glow-wire test	Temperature 650 °C, duration 30 s
Flammability mark	For mounting on normally flammable surfaces
CE mark	Yes
ENEC mark	ENEC mark
EU RoHS compliant	Yes
Performance ambient temperature Tq	25 °C
Flickering value (PstLM) - Flickering value as per EN 61000-3-3	1
Stroboscopic effect visibility measure (SVM)	0.4
Ambient temperature range	-20 to +40 °C

Initial Performance (IEC Compliant)

Luminous flux tolerance	-10% / +10%
Initial chromaticity	(0.43,0.40) SDCM<3; (0.38,0.38) SDCM<3
Power consumption tolerance	+/-10%
Standard Deviation of Colour Matching (McAdam ellipse)	SDCM≤3

Over Time Performance (IEC Compliant)

Control gear failure rate at median useful life 50000 h	5 %
Lumen maintenance (EN-IEC 62722-2-1) at median useful life* 50000 h	L80

Sustainability Data

Repair class	Repair Class D, this product is not designed to be repaired.
Embedded carbon (A1-A3)	4.07 kg CO_2e
Product non-virgin material ratio	8.19 %
Recyclable content ratio of the finished product	52.1 %
GWP total B6 (kg CO2eq) Declared Unit	Please calculate using your local energy mix value: Power Declared Unit (kW) * Service life (hrs) Declared Unit * Energy mix (kg CO2eq / kwh)
GWP total B6 (kg CO2eq) Functional Unit	Please calculate using your local energy mix value: Power Declared Unit (kW) * 1000 (lm) /lumen output (lm) Declared Unit * 35000 (hrs) * Energy mix (kg CO2 eq / kwh)
Non-virgin material ratio of the packaging	Cardboard > 80% recycled
Packaging Recyclable content ratio	Cardboard recycling rate > 80%
Packaging Material	Cardboard

Product Data

Order product name	DN145B LED10S/830_840 PSU WH
Full product name	DN145B LED10S/830_840 PSU WH
Full product code	872016950041999
Order code	911401816185
Material Nr. (12NC)	911401816185
Numerator - Quantity Per Pack	1
EAN/UPC - Product/Case	8720169500419
Numerator - Packs per outer box	24
EAN/UPC - Case	8720169500464

Dimensional drawing

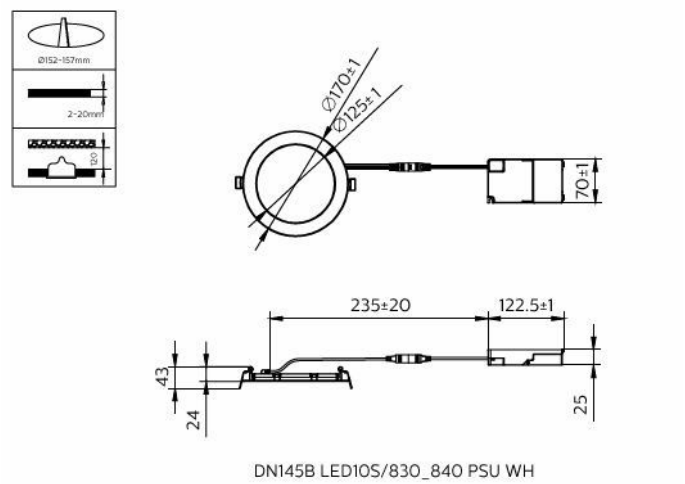

DN145B LED10S/830_840 PSU WH

Polar normal diagrams

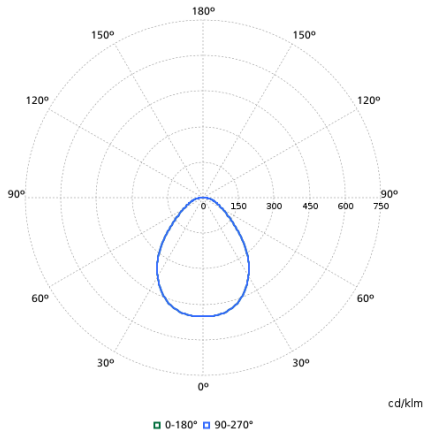

Compatible Accesories

Accessory Image	Accessory Code	Accessory Name	Website
	912401483602	EM300V ELB_ELP3 kit LV 3.6V 4800mAh LIB	Product Website

Related Documents

Documents and certificates	Document Name	Download
Installation Instructions	Coreline-slim-downlight-Dn145B-INI-260716.pdf	Download
Environmental Product Declaration	EPD-Philips-CL-SlimDownlight-DN145B-LED10S-830-840-PSU-WH-911401816185.pdf	Download

Photometry and lighting design	Document Name	Download
IES File	dn145b-led10s-830-840-psu-wh-911401816185.ies	Download
LDT File	dn145b-led10s-830-840-psu-wh-911401816185.ldt	Download
ROLF File	dn145b-led10s-830-840-psu-wh-911401816185.rolfz	Download
ULD File	dn145b-led10s-830-840-psu-wh-911401816185.uld	Download
Revit file	dn145b-led10s-830-840-psu-wh-911401816185.zip	Download

© 2026 Signify Holding. All rights reserved. The information provided herein is subject to change, without notice. Signify does not give any representation or warranty as to the accuracy or completeness of the information included herein and shall not be liable for any action in reliance thereon. The information presented in this document is not intended as any commercial offer and does not form part of any quotation or contract, unless otherwise agreed by Signify. Philips and the Philips Shield Emblem are registered trademarks of Koninklijke Philips N.V.