PHILIPS

Uni Posttop Classic

10486625



Uni Posttop Classic: Urban Street Light targets at residential areas, pathways, Plazas, etc.

Inspired by the well-known street lanterns in 20th Century, the Philips Uni Posttop classic mixes the conventional classic with Philips's modern design, meeting various criteria in quality and safety while providing outstanding lumen performance under the standard of street lighting. The classical housing creates a contemporary feel which fits not only traditional settings but also modern environments. In addition, to cater for different needs in application scenarios, Philips Uni Posttop provides two optics option, i.e., symmetric and asymmetric. Besides, the Philips Uni Posttop classic features a NEMA socket in option, which enables this fixture ready for smart system based on 1-10V or Dali 2.0 interface.

Benefits

- Contemporary shape inspired by traditional lanterns.
- Suits not only traditional settings but also modern environments.
- Ready for Interact and other smart systems.

Applications

- Road and Street
- Parks and Plazas
- Residential

- Main urban roads and streets, side and residential roads and streets
- City centers and historical areas
- Cycle and pedestrian paths, squares, parks and playground

Features

- Optimized optics for efficient and comfortable lighting levels
- Ready to be paired with Interact and other lighting controls
- Direct retrofit for conventional classic looking post-top

Versions

UNI POSTTOP CLASSIC



Dimensional drawing

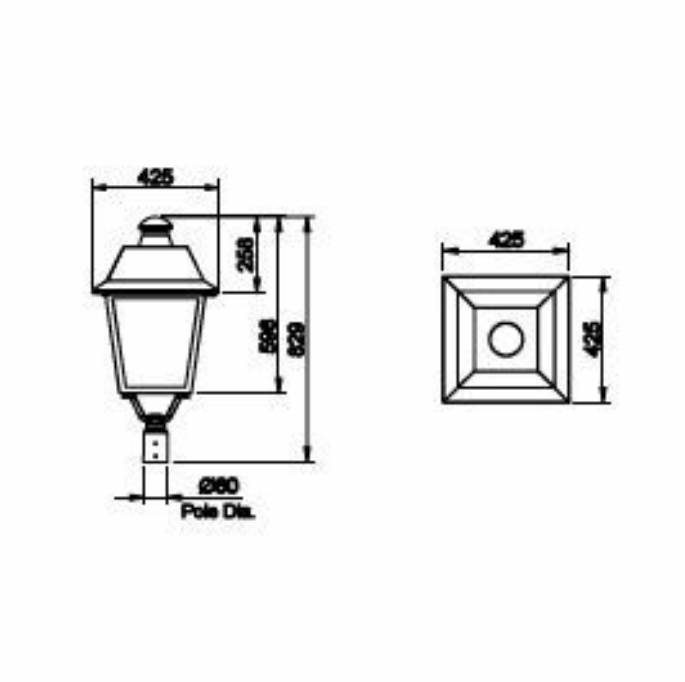

BDP400 LED NW 220V 60W TA PSD P7 9005

General Information

Driver included	Yes

Light Technical

Color rendering index (CRI)	70

Mechanical and Housing

Housing Color	Black
Ingress protection code	IP66 [Dust penetration-protected, jet-proof]
Mech. impact protection code	IK09 [10 J]
Optical cover type	Clear dome

Approval and Application

Flammability mark	-
CE mark	Yes

Light Technical

Order Code	Full Product Name	Luminous Flux	Correlated Color Temperature (Nom)	Light source color
911401700004	BDP400 LED WW 220V 80W TA PSD P7 9005	9,600 lm	3000 K	730 warm white
911401700014	BDP400 LED WW 220V 80W TS PSU 9005	9,600 lm	3000 K	730 warm white
911401700024	BDP400 LED WW 220V 80W TS PSD P7 9005	9,600 lm	3000 K	730 warm white
911401700034	BDP400 LED NW 220V 80W TA PSU 9005	9,600 lm	4000 K	740 neutral white
911401700044	BDP400 LED NW 220V 80W TA PSD P7 9005	9,600 lm	4000 K	740 neutral white
911401700054	BDP400 LED NW 220V 80W TS PSU 9005	9,600 lm	4000 K	740 neutral white
911401700064	BDP400 LED NW 220V 80W TS PSD P7 9005	9,600 lm	4000 K	740 neutral white
911401799833	BDP400 LED WW 220V 30W TA PSU 9005	3,600 lm	3000 K	730 warm white
911401799843	BDP400 LED WW 220V 30W TA PSD P7 9005	3,600 lm	3000 K	730 warm white
911401799853	BDP400 LED WW 220V 30W TS PSU 9005	3,600 lm	3000 K	730 warm white
911401799863	BDP400 LED WW 220V 30W TS PSD P7 9005	3,600 lm	3000 K	730 warm white
911401799873	BDP400 LED NW 220V 30W TA PSU 9005	3,600 lm	4000 K	740 neutral white
911401799883	BDP400 LED NW 220V 30W TA PSD P7 9005	3,600 lm	4000 K	740 neutral white
911401799893	BDP400 LED NW 220V 30W TS PSU 9005	3,600 lm	4000 K	740 neutral white
911401799903	BDP400 LED NW 220V 30W TS PSD P7 9005	3,600 lm	4000 K	740 neutral white
911401799913	BDP400 LED WW 220V 60W TA PSU 9005	7,200 lm	3000 K	730 warm white
911401799923	BDP400 LED WW 220V 60W TA PSD P7 9005	7,200 lm	3000 K	730 warm white
911401799933	BDP400 LED WW 220V 60W TS PSU 9005	7,200 lm	3000 K	730 warm white
911401799943	BDP400 LED WW 220V 60W TS PSD P7 9005	7,200 lm	3000 K	730 warm white
911401799953	BDP400 LED NW 220V 60W TA PSU 9005	7,200 lm	4000 K	740 neutral white
911401799963	BDP400 LED NW 220V 60W TA PSD P7 9005	7,200 lm	4000 K	740 neutral white
911401799973	BDP400 LED NW 220V 60W TS PSU 9005	7,200 lm	4000 K	740 neutral white
911401799983	BDP400 LED NW 220V 60W TS PSD P7 9005	7,200 lm	4000 K	740 neutral white
911401799993	BDP400 LED WW 220V 80W TA PSU 9005	9,600 lm	3000 K	730 warm white

Operating and Electrical

Order Code	Full Product Name	Power Consumption
911401700004	BDP400 LED WW 220V 80W TA PSD P7 9005	80 W
911401700014	BDP400 LED WW 220V 80W TS PSU 9005	80 W
911401700024	BDP400 LED WW 220V 80W TS PSD P7 9005	80 W
911401700034	BDP400 LED NW 220V 80W TA PSU 9005	80 W
911401700044	BDP400 LED NW 220V 80W TA PSD P7 9005	80 W
911401700054	BDP400 LED NW 220V 80W TS PSU 9005	80 W
911401700064	BDP400 LED NW 220V 80W TS PSD P7 9005	80 W
911401799833	BDP400 LED WW 220V 30W TA PSU 9005	30 W
911401799843	BDP400 LED WW 220V 30W TA PSD P7 9005	30 W
911401799853	BDP400 LED WW 220V 30W TS PSU 9005	30 W
911401799863	BDP400 LED WW 220V 30W TS PSD P7 9005	30 W
911401799873	BDP400 LED NW 220V 30W TA PSU 9005	30 W
911401799883	BDP400 LED NW 220V 30W TA PSD P7 9005	30 W
911401799893	BDP400 LED NW 220V 30W TS PSU 9005	30 W
911401799903	BDP400 LED NW 220V 30W TS PSD P7 9005	30 W
911401799913	BDP400 LED WW 220V 60W TA PSU 9005	60 W
911401799923	BDP400 LED WW 220V 60W TA PSD P7 9005	60 W
911401799933	BDP400 LED WW 220V 60W TS PSU 9005	60 W
911401799943	BDP400 LED WW 220V 60W TS PSD P7 9005	60 W
911401799953	BDP400 LED NW 220V 60W TA PSU 9005	60 W
911401799963	BDP400 LED NW 220V 60W TA PSD P7 9005	60 W
911401799973	BDP400 LED NW 220V 60W TS PSU 9005	60 W
911401799983	BDP400 LED NW 220V 60W TS PSD P7 9005	60 W
911401799993	BDP400 LED WW 220V 80W TA PSU 9005	80 W

Controls and Dimming

Order Code	Full Product Name	Dimmable
911401700004	BDP400 LED WW 220V 80W TA PSD P7 9005	Yes
911401700014	BDP400 LED WW 220V 80W TS PSU 9005	No
911401700024	BDP400 LED WW 220V 80W TS PSD P7 9005	Yes
911401700034	BDP400 LED NW 220V 80W TA PSU 9005	No
911401700044	BDP400 LED NW 220V 80W TA PSD P7 9005	Yes
911401700054	BDP400 LED NW 220V 80W TS PSU 9005	No
911401700064	BDP400 LED NW 220V 80W TS PSD P7 9005	Yes
911401799833	BDP400 LED WW 220V 30W TA PSU 9005	No
911401799843	BDP400 LED WW 220V 30W TA PSD P7 9005	Yes
911401799853	BDP400 LED WW 220V 30W TS PSU 9005	No
911401799863	BDP400 LED WW 220V 30W TS PSD P7 9005	Yes
911401799873	BDP400 LED NW 220V 30W TA PSU 9005	No
911401799883	BDP400 LED NW 220V 30W TA PSD P7 9005	Yes

Order Code	Full Product Name	Dimmable
911401799893	BDP400 LED NW 220V 30W TS PSU 9005	No
911401799903	BDP400 LED NW 220V 30W TS PSD P7 9005	Yes
911401799913	BDP400 LED WW 220V 60W TA PSU 9005	No
911401799923	BDP400 LED WW 220V 60W TA PSD P7 9005	Yes
911401799933	BDP400 LED WW 220V 60W TS PSU 9005	No
911401799943	BDP400 LED WW 220V 60W TS PSD P7 9005	Yes
911401799953	BDP400 LED NW 220V 60W TA PSU 9005	No
911401799963	BDP400 LED NW 220V 60W TA PSD P7 9005	Yes
911401799973	BDP400 LED NW 220V 60W TS PSU 9005	No
911401799983	BDP400 LED NW 220V 60W TS PSD P7 9005	Yes
911401799993	BDP400 LED WW 220V 80W TA PSU 9005	No

© 2026 Signify Holding. All rights reserved. The information provided herein is subject to change, without notice. Signify does not give any representation or warranty as to the accuracy or completeness of the information included herein and shall not be liable for any action in reliance thereon. The information presented in this document is not intended as any commercial offer and does not form part of any quotation or contract, unless otherwise agreed by Signify. Philips and the Philips Shield Emblem are registered trademarks of Koninklijke Philips N.V.