UrbanWave brackets

JRB435



Flowing with subtlety

The UrbanWave collection adds subtle design to a set of luminaires and an environment, by night as well as by day. The design is contemporary, stands out in its simplicity and provides great lighting efficiency.

Benefits

- Compatible with our Accante range of conical poles
- Compatible with all Philips standard and advanced public lighting systems

Applications

- City centers, commercial districts
- Roads and streets

Features

- Available in single arm, double arm, pole-mounting and wall-mounting versions
- Optional luminous cap on the backside of the bracket
- Length range: 750 or 1200mm
- Luminaire fixing: side-entry

Versions

URBANWAVE SA BRACKET-JRB435 S1200 D60



URBANWAVE POLE OR WALL BRACKET-JRB435 S750 D48



URBANWAVE DA BRACKET-JRB435 S750 D48



URBANWAVE DA BRACKET-JRB435 S750 D60



URBANWAVE POLE OR WALL BRACKET-JRB435 S750 D60



URBANWAVE DA BRACKET-JRB435 S1200 D60



URBANWAVE SA BRACKET-JRB435 S750 D60



URBANWAVE SA BRACKET-JRB435 S750 D48



Dimensional drawing

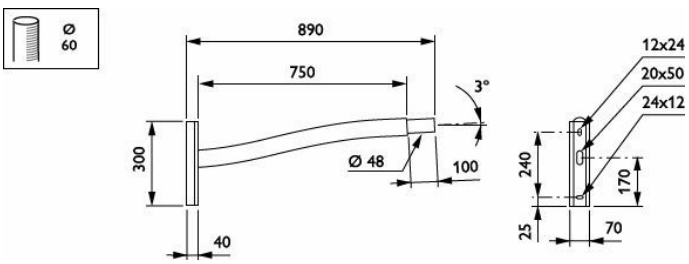

- 750 mm - 60 mm - 3° - RAL color -

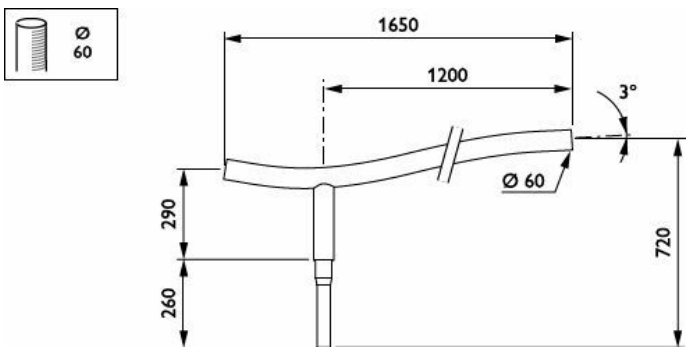

- 1200 mm - 60 mm - 3° - RAL color -

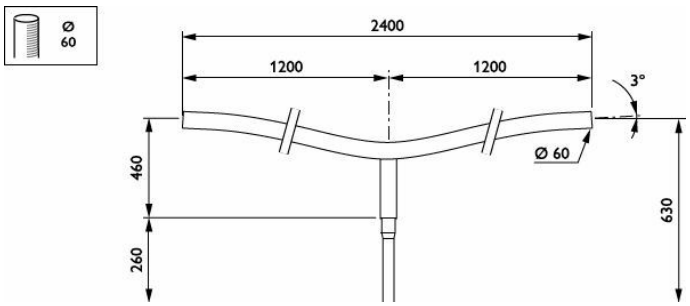

- 1200 mm - 60 mm - 3° - RAL color -

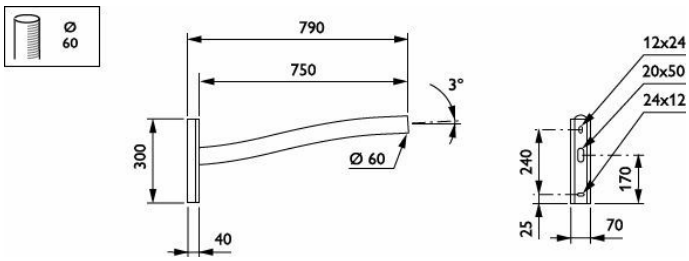

- 750 mm - 60 mm - 3° - RAL color -

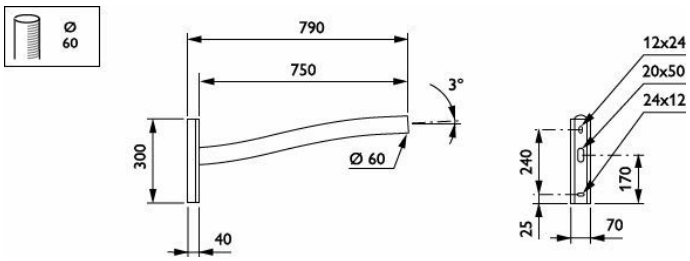

- 750 mm - 60 mm - 3° - RAL color -

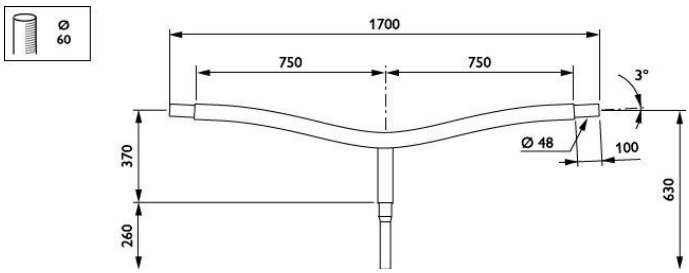

- 750 mm - 60 mm - 3° - RAL color -

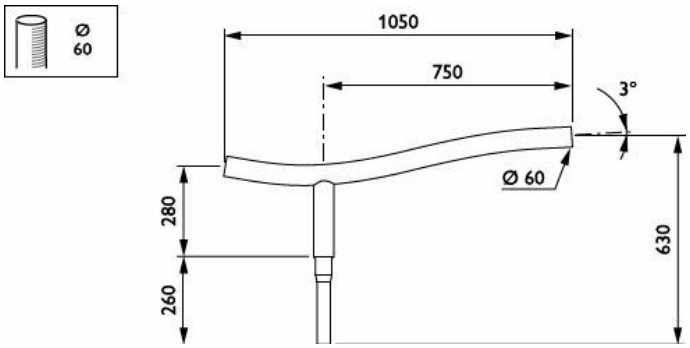

- 750 mm - 60 mm - 3° - RAL color -

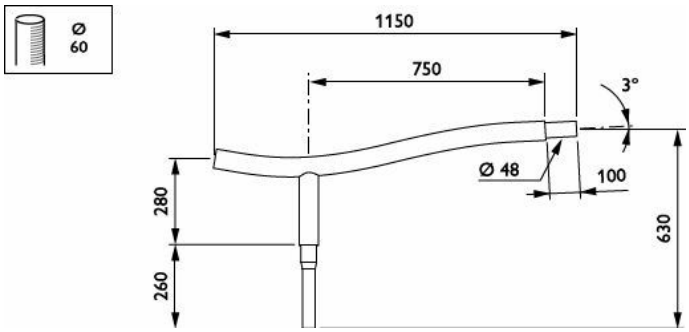

- 750 mm - 60 mm - 3° - RAL color -

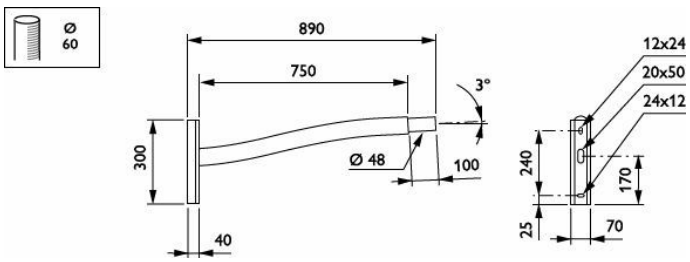

- 750 mm - 60 mm - 3° - RAL color -

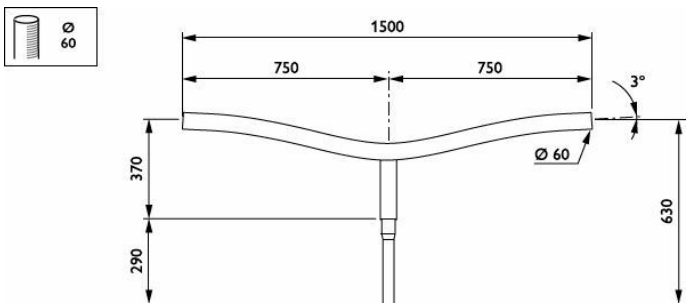

- 750 mm - 60 mm - 3° - RAL color -

Approval and Application

CE mark	Yes

© 2026 Signify Holding. All rights reserved. The information provided herein is subject to change, without notice. Signify does not give any representation or warranty as to the accuracy or completeness of the information included herein and shall not be liable for any action in reliance thereon. The information presented in this document is not intended as any commercial offer and does not form part of any quotation or contract, unless otherwise agreed by Signify. All trademarks are owned by Signify Holding or their respective owners.