PHILIPS

CoreLine SlimDownlight

DN135B



Install smarter, finish sooner. Choose long-lasting reliability and performance

CoreLine slimdownlight delivers on the CoreLine promise of innovative, easy to use and high-quality indoor LED downlights. CoreLine slimdownlight is an innovative range of recessed and surface-mounted luminaires. It is designed to provide uniform lighting across multiple application areas. With instant energy savings and a longer lifetime, this is an environmentally friendly and cost saving solution. Its MultiColorTemp feature offers a choice of two color temperatures in a single luminaire. This makes it easy to select the right product, gives you the flexibility respond to customer preferences on site, and means fewer product codes on stock. Simple and easy installation means our slim downlight fits the same size cut-out, while the minimal built-in depth of 34mm makes this product an ideal space saving solution, especially for projects with limited fitting space. InterAct Ready option with integrated wireless communications in this family is available, to be used with InterAct gateways, sensors and software.

Benefits

- MultiColorTemp option to change color temperature on site and simplify product selection
- Energy saving and longer lifetime to reduce overall operating costs
- Covers recessed and surface-mounted installations
- Fits suspended ceilings with low space (Product height < 50mm)
- Surface of light effect creates a comfortable, uniform look

Applications

- Corridors
- Retail stores
- Reception areas
- Restrooms
- Technical rooms

Features

- MultiColorTemp feature: two color temperature options in a single luminaire (3000K-4000K)
- Recessed (DN145B) and surface-mounted versions (DN145C)
- Energy-efficient with a long lifespan: up to 100lm/W and 50,000 hours @L70
- Push-in connector with through-wiring option
- Multiple light output options: 650/1100/2100 lumen
- Color temperature: 3000K and 4000K
- Choice of drivers; DALI and wireless with Interact ready
- Total height (including driver): 34mm recessed; 50mm surface mounted

Versions



CoreLine SlimDownlight DN145B Compact PSU



Coreline SlimDownlight-DN145C 10S



Coreline SlimDownlight-DN145C 20S



CoreLine SlimDownlight DN145B Compact WIA



CoreLine SlimDownlight DN145B Mini WIA



Coreline SlimDownlight-DN145B 20S



CoreLine SlimDownlight DN145B Compact PSD



CoreLine SlimDownlight DN145B Micro PSU



Coreline SlimDownlight-DN145B 10S



Coreline SlimDownlight-DN145B 6S



CoreLine SlimDownlight DN145B Mini PSD



CoreLine SlimDownlight DN145B Mini PSU

Dimensional drawing

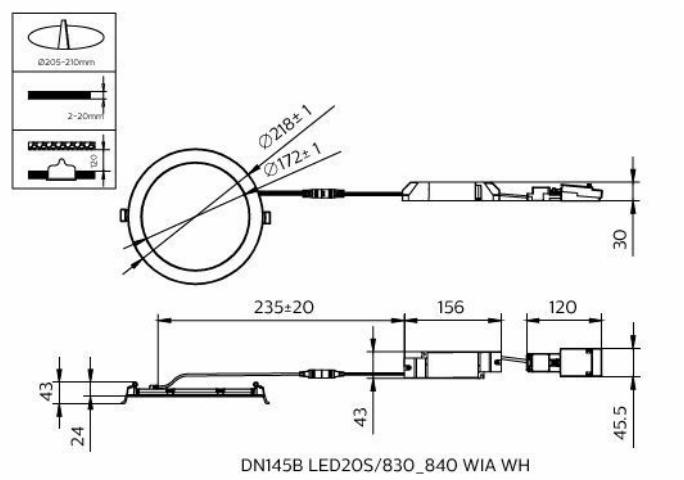

DN145B LED20S/830_840 WIA WH

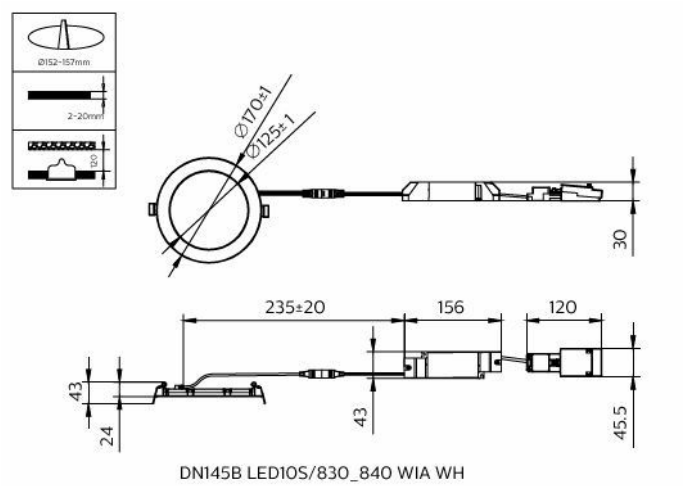

DN145B LED10S/830_840 WIA WH

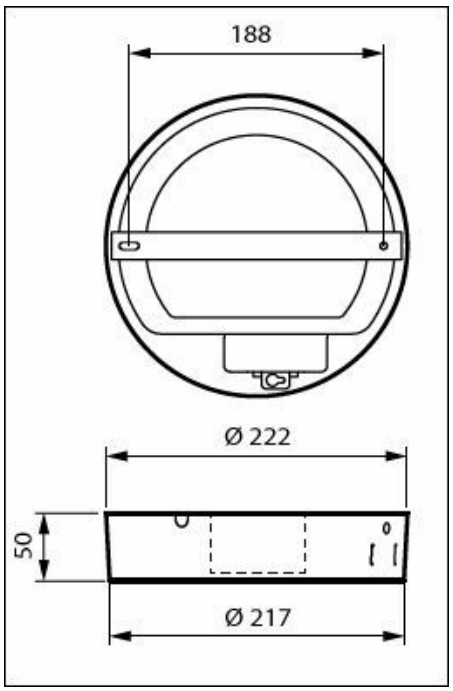

830 warm white - Power supply unit - Safety class II - White

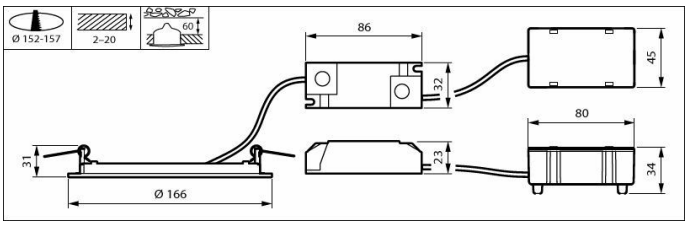

830 warm white - Power supply unit - Safety class II - White

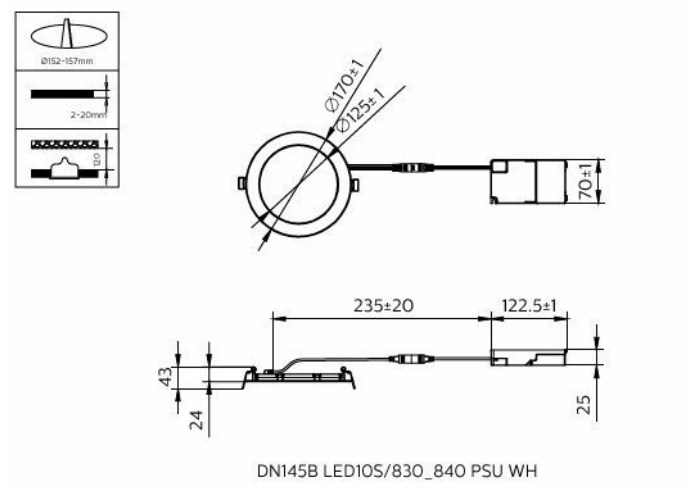

DN145B LED10S/830_840 PSU WH

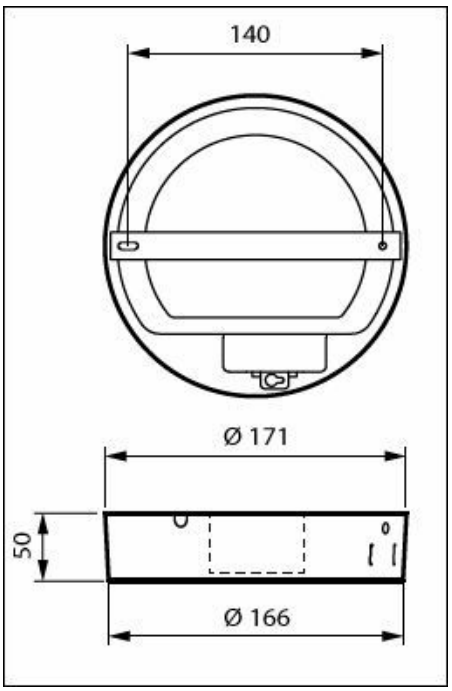

840 neutral white - Power supply unit - Safety class II - White

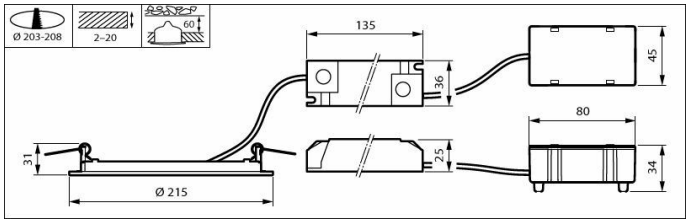

830 warm white - Power supply unit - Safety class II - White

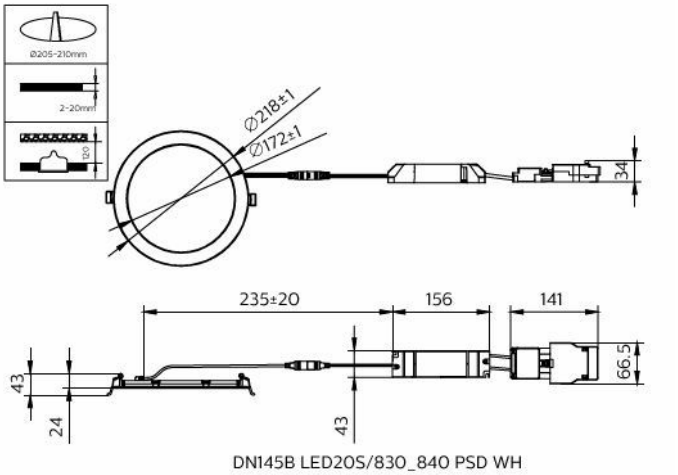

DN145B LED20S/830_840 PSD WH

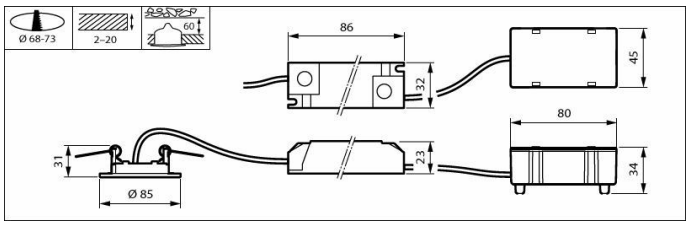

840 neutral white - Power supply unit - Safety class II - White

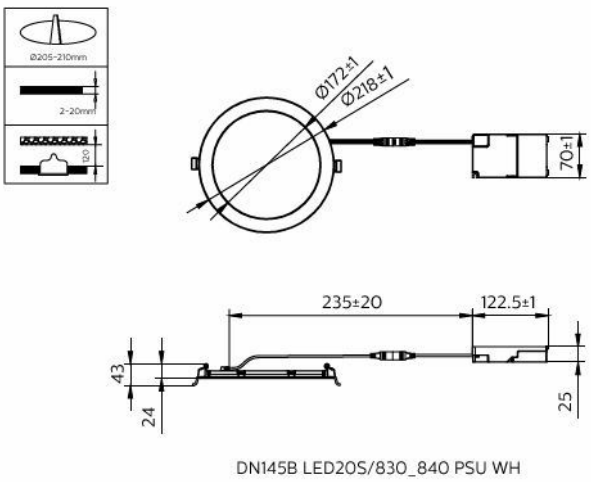

DN145B LED20S/830_840 PSU WH

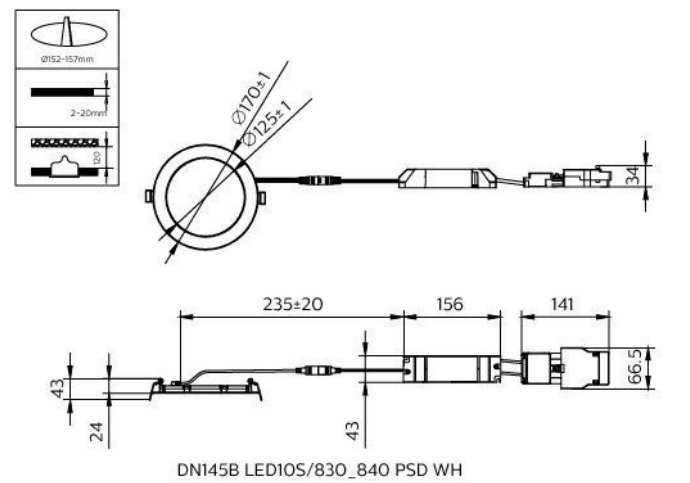

DN145B LED10S/830_840 PSD WH

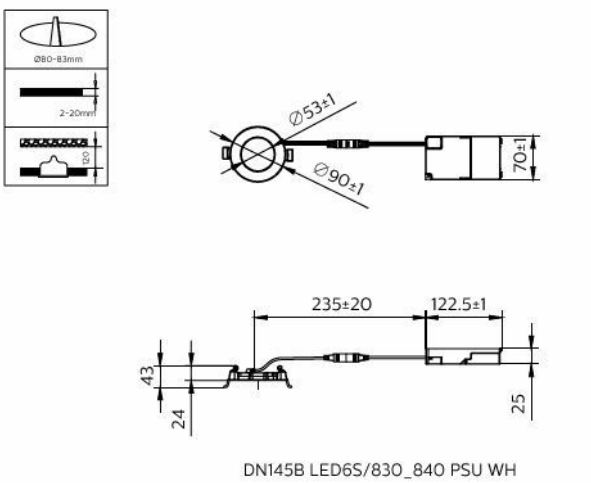

DN145B LED6S/830_840 PSU WH

Product details



CoreLine SlimDownlight 2100lm side view



CoreLine SlimDownlight Surface-mounted 2100lm



CoreLine SlimDownlight DN145B Compact PSU



Philips CoreLine SlimDownlight Recessed DT01



CoreLine SlimDownlight 2100lm with PSU driver and easy connector



CoreLine SlimDownlight 2100lm



CoreLine SlimDownlight DN145B PSU Driver



Philips CoreLine SlimDownlight Surface DT02



Philips CoreLine SlimDownlight Surface DT01

General Information

Light source replaceable	No
Number of gear units	1 unit
Driver included	Yes
Service tag	Yes

Light Technical

Color rendering index (CRI)	>80
Number of light sources	1
Beam angle of light source	120 degree(s)
All-in Type	All-in, Multi Color Temperature

Operating and Electrical

Input Voltage	220 to 240 V
Line Frequency	50 or 60 Hz
Suitable for random switching	Yes
Protection class IEC	Safety class II

Controls and Dimming

Maximum dim level	Not applicable

Mechanical and Housing

Housing Color	White
Optical cover type	Opal

Emergency Operation

Central Emergency	No
Emergency lighting	Self-contained emergency lighting is possible when used with a compatible battery kit accessory

Approval and Application

Glow-wire test	Temperature 650 °C, duration 30 s
Flammability mark	For mounting on normally flammable surfaces
CE mark	Yes
ENEC mark	ENEC mark
Flickering value (PstLM) - Flickering value as per EN 61000-3-3	1

Over Time Performance (IEC Compliant)

Driver failure rate at 5000 h	0.0015 %

Product Data

Product family code	DN145B [Coreline Slimdownlight G3_LSC]

General Information

Order Code	Full Product Name	Lamp family code
911401816285	DN145B LED20S/830_840 PSU WH	-
911401806380	DN145C LED10S/830 PSU II WH	LED10S
911401806480	DN145C LED10S/840 PSU II WH	LED10S
911401806580	DN145C LED20S/830 PSU II WH	LED20S
911401806680	DN145C LED20S/840 PSU II WH	LED20S
911401894987	DN145B LED20S/830_840 WIA WH	-
911401894887	DN145B LED10S/830_840 WIA WH	-
910500465903	DN145B LED20S/830 PSD-E II WH	LED20S
910500465904	DN145B LED20S/840 PSD-E II WH	LED20S
910505101197	DN145B LED20S/830 WIA-E WH	-
911401806180	DN145B LED20S/830 PSU II WH	LED20S
911401806280	DN145B LED20S/840 PSU II WH	LED20S
911401894787	DN145B LED20S/830_840 PSD WH	-
911401816085	DN145B LED6S/830_840 PSU WH	-
910500465901	DN145B LED10S/830 PSD-E II WH	LED10S
910500465902	DN145B LED10S/840 PSD-E II WH	LED10S
911401805980	DN145B LED10S/830 PSU II WH	LED10S
911401806080	DN145B LED10S/840 PSU II WH	LED10S
911401805780	DN145B LED6S/830 PSU II WH	LED6S
911401805880	DN145B LED6S/840 PSU II WH	LED6S
911401894687	DN145B LED10S/830_840 PSD WH	-
911401816185	DN145B LED10S/830_840 PSU WH	-

Light Technical

Order Code	Full Product Name	Luminous Flux	Correlated Color Temperature (Nom)	Luminous Efficacy (rated) (Nom)	Optic type
911401816285	DN145B LED20S/830_840 PSU WH	2,000 lm 2,100 lm	3000 K 4000 K	120 lm/W 114 lm/W	Beam angle 90° Symmetrical
911401806380	DN145C LED10S/830 PSU II WH	1,100 lm	3000 K	100 lm/W	Beam angle 90°
911401806480	DN145C LED10S/840 PSU II WH	1,100 lm	4000 K	100 lm/W	Beam angle 90°
911401806580	DN145C LED20S/830 PSU II WH	2,100 lm	3000 K	100 lm/W	Beam angle 90°
911401806680	DN145C LED20S/840 PSU II WH	2,100 lm	4000 K	100 lm/W	Beam angle 90°
911401894987	DN145B LED20S/830_840 WIA WH	2,000 lm 2,100 lm	3000 K 4000 K	120 lm/W 114 lm/W	Beam angle 90° Symmetrical
911401894887	DN145B LED10S/830_840 WIA WH	1,080 lm 1,150 lm	3000 K 4000 K	115 lm/W 108 lm/W	Beam angle 90° Symmetrical
910500465903	DN145B LED20S/830 PSD-E II WH	2,000 lm	3000 K	89 lm/W	Beam angle 90°
910500465904	DN145B LED20S/840 PSD-E II WH	2,000 lm	4000 K	89 lm/W	Beam angle 90°
910505101197	DN145B LED20S/830 WIA-E WH	2,000 lm	3000 K	89 lm/W	Beam angle 90°
911401806180	DN145B LED20S/830 PSU II WH	2,100 lm	3000 K	100 lm/W	Beam angle 90°

Order Code	Full Product Name	Luminous Flux	Correlated Color Temperature (Nom)	Luminous Efficacy (rated) (Nom)	Optic type
911401806280	DN145B LED20S/840 PSU II WH	2,100 lm	4000 K	100 lm/W	Beam angle 90°
911401894787	DN145B LED20S/830_840 PSD WH	2,000 lm 2,100 lm	3000 K 4000 K	117 lm/W 111 lm/W	Beam angle 90° Symmetrical
911401816085	DN145B LED6S/830_840 PSU WH	680 lm 700 lm	3000 K 4000 K	110 lm/W 105 lm/W	Beam angle 90° Symmetrical
910500465901	DN145B LED10S/830 PSD-E II WH	1,000 lm	3000 K	77 lm/W	Beam angle 90°
910500465902	DN145B LED10S/840 PSD-E II WH	1,000 lm	4000 K	77 lm/W	Beam angle 90°
911401805980	DN145B LED10S/830 PSU II WH	1,100 lm	3000 K	100 lm/W	Beam angle 90°
911401806080	DN145B LED10S/840 PSU II WH	1,100 lm	4000 K	100 lm/W	Beam angle 90°
911401805780	DN145B LED6S/830 PSU II WH	650 lm	3000 K	100 lm/W	Beam angle 90°
911401805880	DN145B LED6S/840 PSU II WH	650 lm	4000 K	100 lm/W	Beam angle 90°
911401894687	DN145B LED10S/830_840 PSD WH	1,080 lm 1,150 lm	3000 K 4000 K	115 lm/W 108 lm/W	Beam angle 90° Symmetrical
911401816185	DN145B LED10S/830_840 PSU WH	1,080 lm 1,150 lm	3000 K 4000 K	120 lm/W 114 lm/W	Beam angle 90° Symmetrical

Operating and Electrical

Order Code	Full Product Name	Power Consumption
911401816285	DN145B LED20S/830_840 PSU WH	17.5 W
911401806380	DN145C LED10S/830 PSU II WH	11 W
911401806480	DN145C LED10S/840 PSU II WH	11 W
911401806580	DN145C LED20S/830 PSU II WH	21 W
911401806680	DN145C LED20S/840 PSU II WH	21 W
911401894987	DN145B LED20S/830_840 WIA WH	17.5 W
911401894887	DN145B LED10S/830_840 WIA WH	10 W
910500465903	DN145B LED20S/830 PSD-E II WH	22.5 W
910500465904	DN145B LED20S/840 PSD-E II WH	22.5 W
910505101197	DN145B LED20S/830 WIA-E WH	22.5 W
911401806180	DN145B LED20S/830 PSU II WH	21 W
911401806280	DN145B LED20S/840 PSU II WH	21 W
911401894787	DN145B LED20S/830_840 PSD WH	18 W
911401816085	DN145B LED6S/830_840 PSU WH	6.5 W
910500465901	DN145B LED10S/830 PSD-E II WH	13 W
910500465902	DN145B LED10S/840 PSD-E II WH	13 W
911401805980	DN145B LED10S/830 PSU II WH	11 W
911401806080	DN145B LED10S/840 PSU II WH	11 W
911401805780	DN145B LED6S/830 PSU II WH	6.5 W
911401805880	DN145B LED6S/840 PSU II WH	6.5 W
911401894687	DN145B LED10S/830_840 PSD WH	10 W
911401816185	DN145B LED10S/830_840 PSU WH	9.5 W

Controls and Dimming

Order Code	Full Product Name	Dimmable
911401816285	DN145B LED20S/830_840 PSU WH	No
911401806380	DN145C LED10S/830 PSU II WH	No
911401806480	DN145C LED10S/840 PSU II WH	No
911401806580	DN145C LED20S/830 PSU II WH	No
911401806680	DN145C LED20S/840 PSU II WH	No
911401894987	DN145B LED20S/830_840 WIA WH	Yes
911401894887	DN145B LED10S/830_840 WIA WH	Yes
910500465903	DN145B LED20S/830 PSD-E II WH	Yes
910500465904	DN145B LED20S/840 PSD-E II WH	Yes
910505101197	DN145B LED20S/830 WIA-E WH	Yes
911401806180	DN145B LED20S/830 PSU II WH	No
911401806280	DN145B LED20S/840 PSU II WH	No
911401894787	DN145B LED20S/830_840 PSD WH	Yes
911401816085	DN145B LED6S/830_840 PSU WH	No
910500465901	DN145B LED10S/830 PSD-E II WH	Yes
910500465902	DN145B LED10S/840 PSD-E II WH	Yes
911401805980	DN145B LED10S/830 PSU II WH	No
911401806080	DN145B LED10S/840 PSU II WH	No
911401805780	DN145B LED6S/830 PSU II WH	No
911401805880	DN145B LED6S/840 PSU II WH	No
911401894687	DN145B LED10S/830_840 PSD WH	Yes
911401816185	DN145B LED10S/830_840 PSU WH	No

Mechanical and Housing

Order Code	Full Product Name	Ingress protection code	Mech. impact protection code
911401816285	DN145B LED20S/830_840 PSU WH	IP20(IP44 front)	IK03
911401806380	DN145C LED10S/830 PSU II WH	IP20/44	IK02
911401806480	DN145C LED10S/840 PSU II WH	IP20/44	IK02
911401806580	DN145C LED20S/830 PSU II WH	IP20/44	IK02
911401806680	DN145C LED20S/840 PSU II WH	IP20/44	IK02
911401894987	DN145B LED20S/830_840 WIA WH	IP20(IP44 front)	IK03
911401894887	DN145B LED10S/830_840 WIA WH	IP20(IP44 front)	IK03
910500465903	DN145B LED20S/830 PSD-E II WH	IP20/44	IK02
910500465904	DN145B LED20S/840 PSD-E II WH	IP20/44	IK02
910505101197	DN145B LED20S/830 WIA-E WH	IP20/44	IK02
911401806180	DN145B LED20S/830 PSU II WH	IP20/44	IK02
911401806280	DN145B LED20S/840 PSU II WH	IP20/44	IK02
911401894787	DN145B LED20S/830_840 PSD WH	IP20(IP44 front)	IK03
911401816085	DN145B LED6S/830_840 PSU WH	IP20/44	IK03
910500465901	DN145B LED10S/830 PSD-E II WH	IP20/44	IK02

Order Code	Full Product Name	Ingress protection code	Mech. impact protection code
910500465902	DN145B LED10S/840 PSD-E II WH	IP20/44	IK02
911401805980	DN145B LED10S/830 PSU II WH	IP20/44	IK02
911401806080	DN145B LED10S/840 PSU II WH	IP20/44	IK02
911401805780	DN145B LED6S/830 PSU II WH	IP20/44	IK02
911401805880	DN145B LED6S/840 PSU II WH	IP20/44	IK02
911401894687	DN145B LED10S/830_840 PSD WH	IP20(IP44 front)	IK03
911401816185	DN145B LED10S/830_840 PSU WH	IP20(IP44 front)	IK03

Approval and Application

Order Code	Full Product Name	Stroboscopic effect visibility measure (SVM)	Ambient temperature range
911401816285	DN145B LED20S/830_840 PSU WH	0.4	-20 to +40 °C
911401806380	DN145C LED10S/830 PSU II WH	1.6	0 to +35 °C
911401806480	DN145C LED10S/840 PSU II WH	1.6	0 to +35 °C
911401806580	DN145C LED20S/830 PSU II WH	1.6	0 to +35 °C
911401806680	DN145C LED20S/840 PSU II WH	1.6	0 to +35 °C
911401894987	DN145B LED20S/830_840 WIA WH	0.4	-20 to +40 °C
911401894887	DN145B LED10S/830_840 WIA WH	0.4	-20 to +40 °C
910500465903	DN145B LED20S/830 PSD-E II WH	0.4	0 to +35 °C
910500465904	DN145B LED20S/840 PSD-E II WH	0.4	0 to +35 °C
910505101197	DN145B LED20S/830 WIA-E WH	0.4	0 to +35 °C
911401806180	DN145B LED20S/830 PSU II WH	1.6	0 to +35 °C
911401806280	DN145B LED20S/840 PSU II WH	1.6	0 to +35 °C
911401894787	DN145B LED20S/830_840 PSD WH	0.4	-20 to +40 °C
911401816085	DN145B LED6S/830_840 PSU WH	0.4	-20 to +40 °C
910500465901	DN145B LED10S/830 PSD-E II WH	0.4	0 to +35 °C
910500465902	DN145B LED10S/840 PSD-E II WH	0.4	0 to +35 °C
911401805980	DN145B LED10S/830 PSU II WH	1.6	0 to +35 °C
911401806080	DN145B LED10S/840 PSU II WH	1.6	0 to +35 °C
911401805780	DN145B LED6S/830 PSU II WH	1.6	0 to +35 °C
911401805880	DN145B LED6S/840 PSU II WH	1.6	0 to +35 °C
911401894687	DN145B LED10S/830_840 PSD WH	0.4	-20 to +40 °C
911401816185	DN145B LED10S/830_840 PSU WH	0.4	-20 to +40 °C

Initial Performance (IEC Compliant)

Order Code	Full Product Name	Luminous flux tolerance	Initial chromaticity
911401816285	DN145B LED20S/830_840 PSU WH	-10% / +10%	(0.43,0.40) SDCM<3; (0.38,0.38) SDCM<3
911401806380	DN145C LED10S/830 PSU II WH	+/-10%	(0.43657,0.40454) SDCM<3
911401806480	DN145C LED10S/840 PSU II WH	+/-10%	(0.38212,0.38031) SDCM<3
911401806580	DN145C LED20S/830 PSU II WH	+/-10%	(0.43657,0.40454) SDCM<3
911401806680	DN145C LED20S/840 PSU II WH	+/-10%	(0.38212,0.38031) SDCM<3

Order Code	Full Product Name	Luminous flux tolerance	Initial chromaticity
911401894987	DN145B LED20S/830_840 WIA WH	-10% / +10%	(0.43,0.40) SDCM<3; (0.38,0.38) SDCM<3
911401894887	DN145B LED10S/830_840 WIA WH	-10% / +10%	(0.43,0.40) SDCM<3; (0.38,0.38) SDCM<3
910500465903	DN145B LED20S/830 PSD-E II WH	+/-10%	(0.43657,0.40454) SDCM<3
910500465904	DN145B LED20S/840 PSD-E II WH	+/-10%	(0.38212,0.38031) SDCM<3
910505101197	DN145B LED20S/830 WIA-E WH	+/-10%	(0.43657,0.40454) SDCM<3
911401806180	DN145B LED20S/830 PSU II WH	+/-10%	(0.43657,0.40454) SDCM<3
911401806280	DN145B LED20S/840 PSU II WH	+/-10%	(0.38212,0.38031) SDCM<3
911401894787	DN145B LED20S/830_840 PSD WH	-10% / +10%	(0.43,0.40) SDCM<3; (0.38,0.38) SDCM<3
911401816085	DN145B LED6S/830_840 PSU WH	-10% / +10%	(0.43,0.40) SDCM<3; (0.38,0.38) SDCM<3
910500465901	DN145B LED10S/830 PSD-E II WH	+/-10%	(0.43657,0.40454) SDCM<3
910500465902	DN145B LED10S/840 PSD-E II WH	+/-10%	(0.38212,0.38031) SDCM<3
911401805980	DN145B LED10S/830 PSU II WH	+/-10%	(0.43657,0.40454) SDCM<3
911401806080	DN145B LED10S/840 PSU II WH	+/-10%	(0.38212,0.38031) SDCM<3
911401805780	DN145B LED6S/830 PSU II WH	+/-10%	(0.43657,0.40454) SDCM<3
911401805880	DN145B LED6S/840 PSU II WH	+/-10%	(0.38212,0.38031) SDCM<3
911401894687	DN145B LED10S/830_840 PSD WH	-10% / +10%	(0.43,0.40) SDCM<3; (0.38,0.38) SDCM<3
911401816185	DN145B LED10S/830_840 PSU WH	-10% / +10%	(0.43,0.40) SDCM<3; (0.38,0.38) SDCM<3

Polar normal diagrams

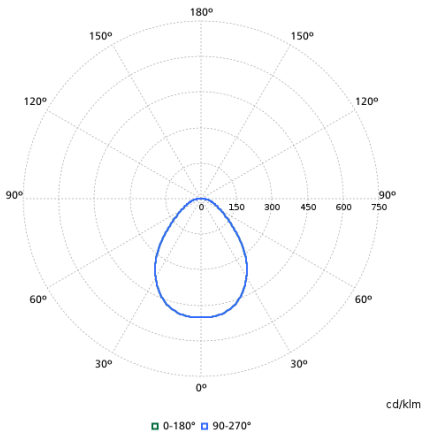

DN145B LED10S/830 PSD-E II WH
910500465901

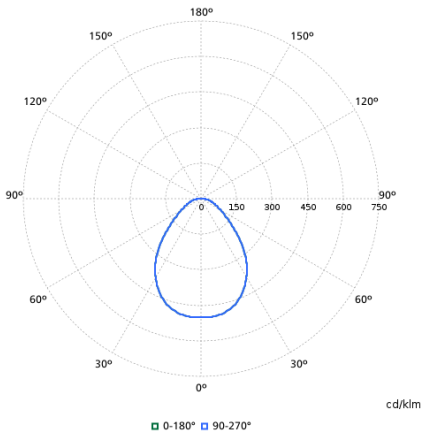

DN145B LED20S/830 PSD-E II WH
910500465903

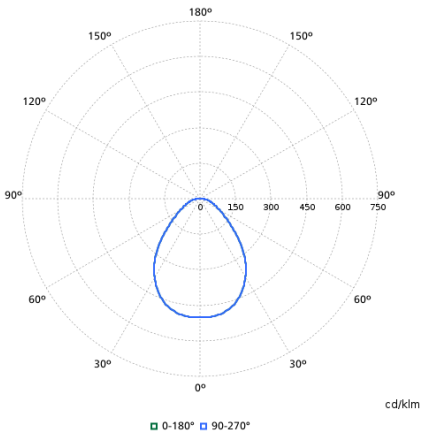

DN145B LED20S/840 PSD-E II WH
910500465904

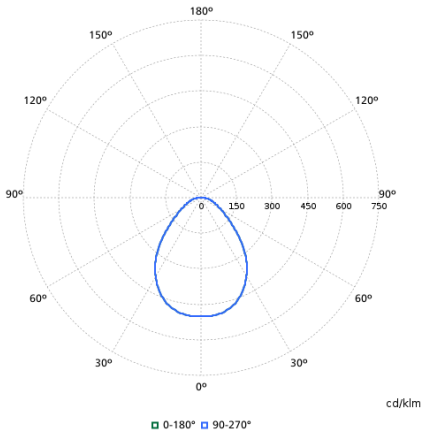

DN145B LED10S/840 PSD-E II WH
910500465902

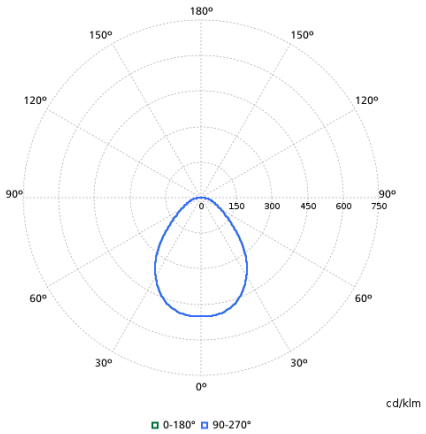

DN145B LED20S/830 WIA-E WH
910505101197

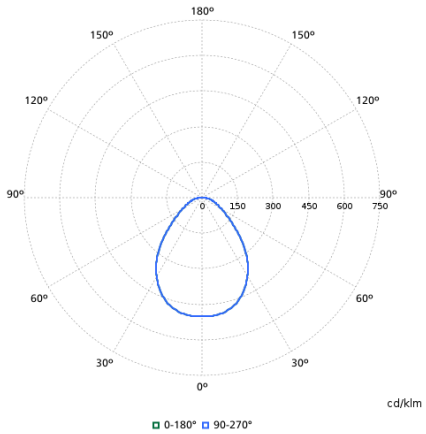

DN145B LED6S/830_840 PSU WH
911401816085

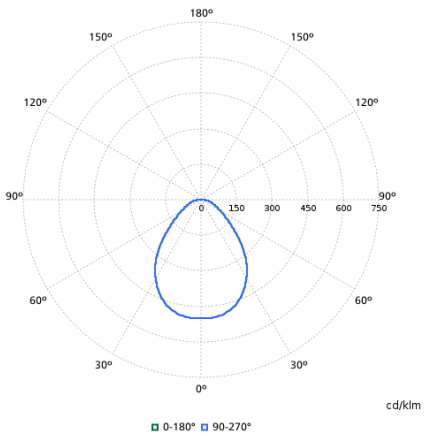

DN145B LED10S/830_840 PSU WH
911401816185

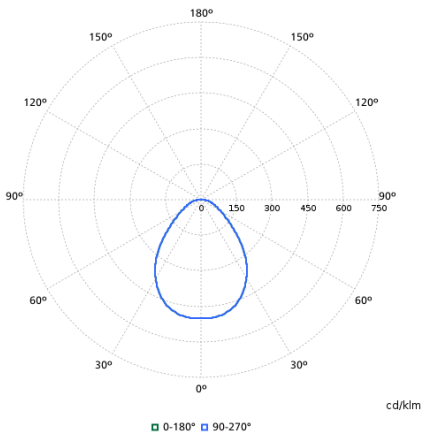

DN145B LED20S/830_840 PSU WH
911401816285

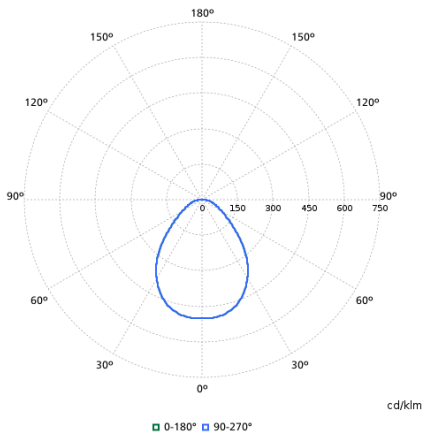

DN145B LED6S/830 PSU II WH
911401805780

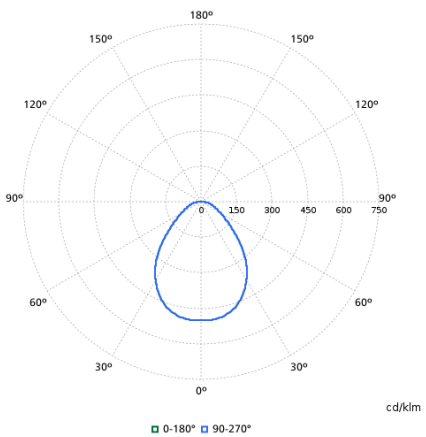

DN145B LED6S/840 PSU II WH
911401805880

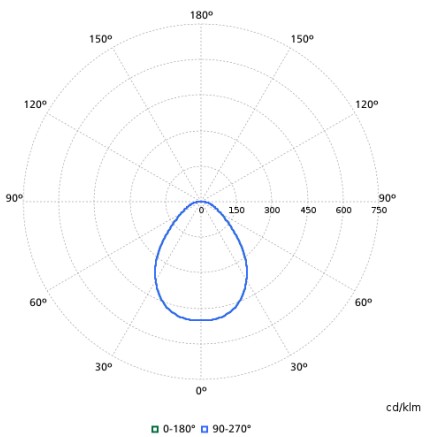

DN145B LED10S/830 PSU II WH
911401805980

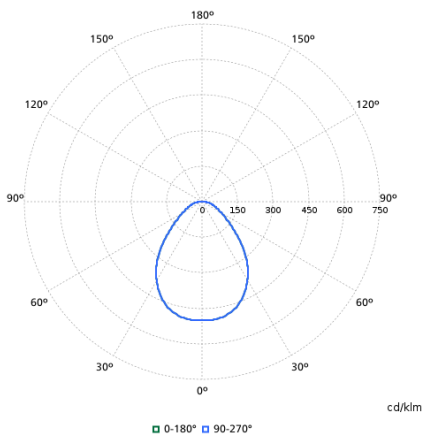

DN145B LED10S/840 PSU II WH
911401806080

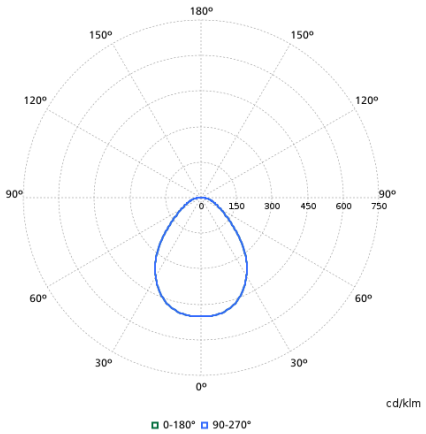

DN145B LED20S/830 PSU II WH
911401806180

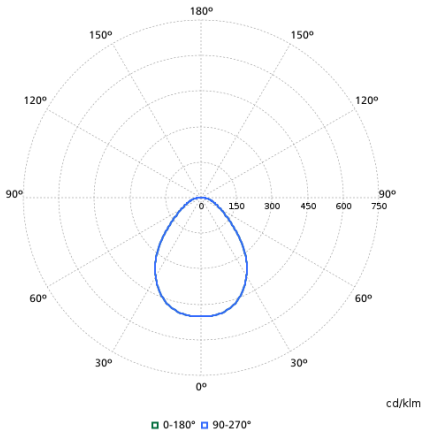

DN145B LED20S/840 PSU II WH
911401806280

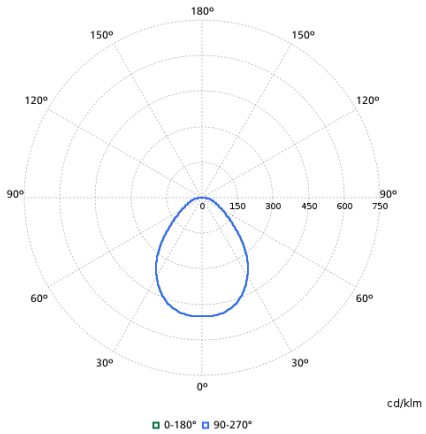

DN145C LED10S/830 PSU II WH
911401806380

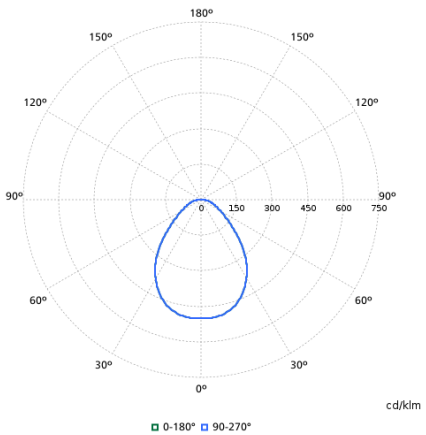

DN145C LED20S/830 PSU II WH
911401806580

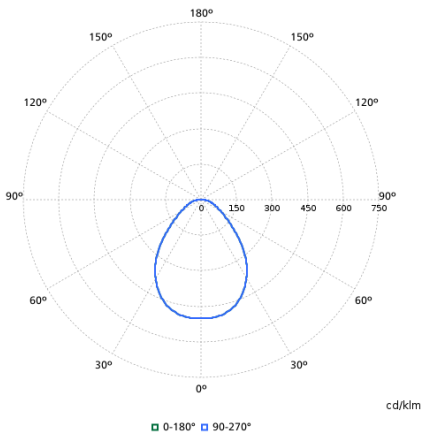

DN145C LED20S/840 PSU II WH
911401806680

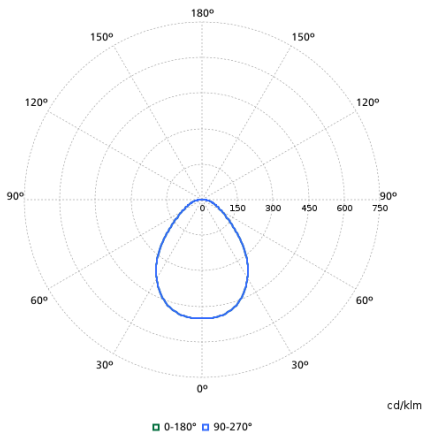

DN145C LED10S/840 PSU II WH
911401806480

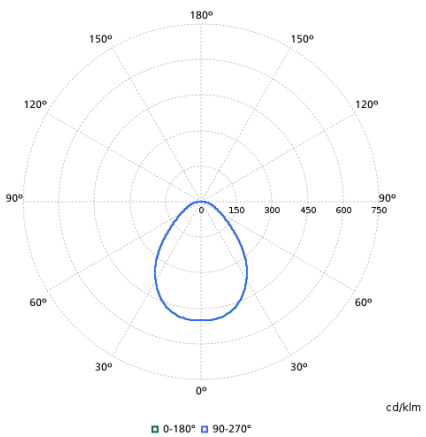

DN145B LED10S/830_840 PSD WH
911401894687

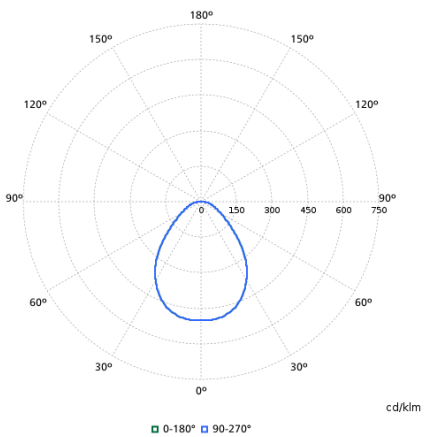

DN145B LED20S/830_840 PSD WH
911401894787

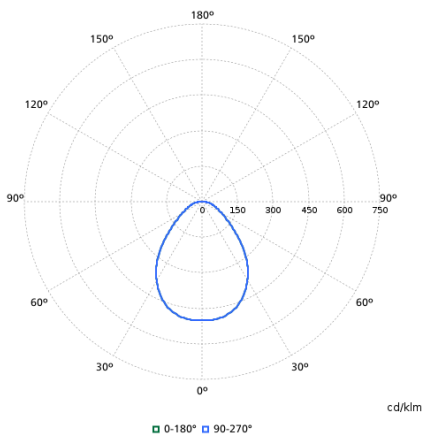

DN145B LED20S/830_840 WIA WH
911401894987

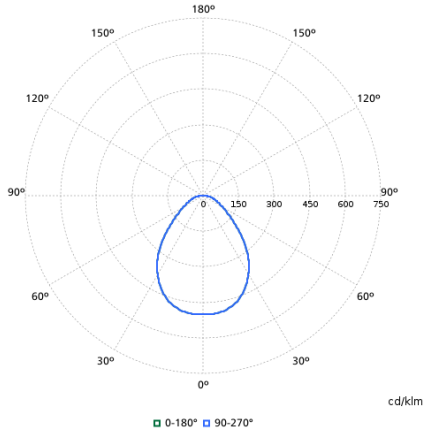

DN145B LED10S/830_840 WIA WH
911401894887

© 2026 Signify Holding. All rights reserved. The information provided herein is subject to change, without notice. Signify does not give any representation or warranty as to the accuracy or completeness of the information included herein and shall not be liable for any action in reliance thereon. The information presented in this document is not intended as any commercial offer and does not form part of any quotation or contract, unless otherwise agreed by Signify. Philips and the Philips Shield Emblem are registered trademarks of Koninklijke Philips N.V.