PHILIPS

WT050C 1xTLED L1200

911401807381



Ledinaire Waterproof Tube Housing, L1200 mm, IP65, IK08

L1200 mm, IP65 | Dust penetration-protected, jet-proof, IK08 | 5 J vandal-protected, Safety class II

General Information

Value ladder	Value
Warranty period	5 years

Light Technical

Color rendering index (CRI)	-
Luminaire light beam spread	-

Operating and Electrical

Input Voltage	220 to 240 V
Line Frequency	50 or 60 Hz
Protection class IEC	Safety class II

Mechanical and Housing

Overall length	1,280 mm
Overall width	69 mm
Overall height	70 mm
Overall diameter	0 mm
Dimensions (Height x Width x Depth)	70 x 69 x 1280 mm
Material	Polycarbonate
Ingress protection code	IP65 [Dust penetration-protected, jet-proof]
Mech. impact protection code	IK08 [5 J vandal-protected]
Accessory color	Gray
Angle	-
Net Weight (Piece)	0.700 kg

Approval and Application

CE mark	Yes
EU RoHS compliant	Yes

Sustainability Data

Non-virgin material ratio of the packaging	Cardboard > 80% recycled
Packaging Recyclable content ratio	Cardboard recycling rate > 80%
Packaging Material	Cardboard

Product Data

Order product name	WT050C 1xTLED L1200
Full product name	WT050C 1xTLED L1200
Full product code	871016336602999
Order code	911401807381
Material Nr. (12NC)	911401807381
Numerator - Quantity Per Pack	1
EAN/UPC - Product/Case	8710163366029
Numerator - Packs per outer box	12
EAN/UPC - Case	8710163366180

Dimensional drawing

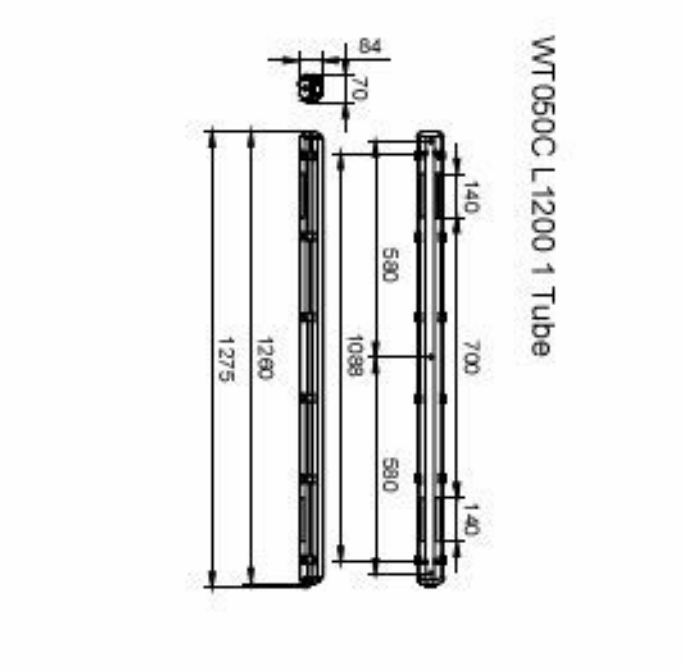

Compatible Accesories

Accessory Image	Accessory Code	Accessory Name	Website
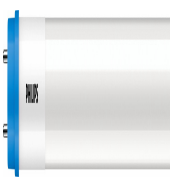	929001874802	CorePro LEDtube 1200mm HO 18W 865 T8	Product Website
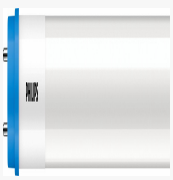	929003519702	CorePro LEDtube 1200mm 15.5W 840 T8	Product Website

Related Documents

Documents and certificates	Document Name	Download
Installation Instructions	MI_WT050C_20200807_FINAL.pdf	Download

© 2026 Signify Holding. All rights reserved. The information provided herein is subject to change, without notice. Signify does not give any representation or warranty as to the accuracy or completeness of the information included herein and shall not be liable for any action in reliance thereon. The information presented in this document is not intended as any commercial offer and does not form part of any quotation or contract, unless otherwise agreed by Signify. Philips and the Philips Shield Emblem are registered trademarks of Koninklijke Philips N.V.