PHILIPS

SmartBright Highbay

BY239G2



Trusted performance.. Everyday..

SmartBright Highbay is a high efficient and reliable LED luminaire. Designed as the point to point replacement for HPI 250W/400W luminaires, it offers customers all the benefits of LED lighting – reduced energy consumption, longer service time and less maintenance. In addition, with using high quality of the optical cover, it provides an excellent quality of light, which effectively improves the comfort of your environment.

Benefits

- Energy saving up to 65% comparing to HPI-P system
- Comfort light quality
- Safe & Reliable
- Easy installation and retrofitting

Applications

- Industry : Factories, warehouses, workshops, assembly lines, etc.
- High ceiling indoor : Shopping malls, airports, stadium, etc.

Features

- High efficacy: 130 lumens per watt
- High quality optical Lens cover
- Lifetime of 30,000 hours @ Ta35^{0}C with end-to-end Philips production quality assurance
- Full family is in compliance with CB and EMC norms
- Suitable for pole, hook, bracket mounting

Versions



SmartBright Highbay G4

Dimensional drawing

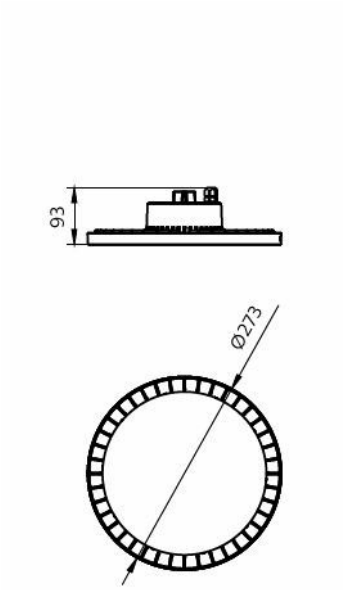

SmartBright Highbay G4

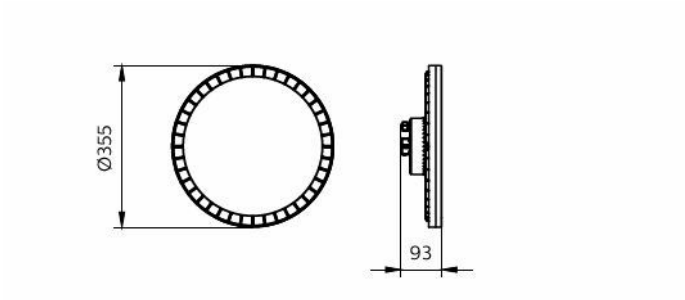

SmartBright Highbay G4

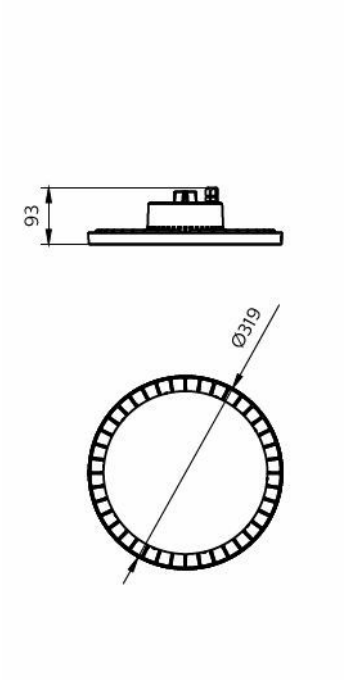

SmartBright Highbay G4

Product details



SmartBright Highbay G4

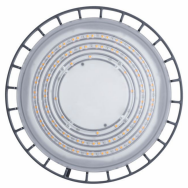

SmartBright Highbay G4

Light Technical

Luminous Efficacy (rated) (Nom)	130 lm/W
Color rendering index (CRI)	>80

Operating and Electrical

Input Voltage	220 to 240 V
Line Frequency	50 or 60 Hz
Protection class IEC	Safety class I

Controls and Dimming

Dimmable	No

Mechanical and Housing

Housing Color	Dark gray
Ingress protection code	IP65 [Dust penetration-protected, jet-proof]
Mech. impact protection code	IK06 [1 J]
Optical cover type	Lens

Approval and Application

Flammability mark	-
CE mark	Yes
Ambient temperature range	-20 to +45 °C

Initial Performance (IEC Compliant)

Luminous flux tolerance	+/-10%

Light Technical

Order Code	Full Product Name	Luminous Flux	Correlated Color Temperature (Nom)
911401639907	BY239P LED80/CW PSU GM G2	7,800 lm	6500 K
911401640007	BY239P LED80/NW PSU GM G2	7,800 lm	4000 K
911401640107	BY239P LED130/CW PSU GM G2	13,000 lm	6500 K
911401640207	BY239P LED130/NW PSU GM G2	13,000 lm	4000 K
911401640307	BY239P LED195/CW PSU GM G2	19,500 lm	6500 K
911401640407	BY239P LED195/NW PSU GM G2	19,500 lm	4000 K
911401640507	BY239P LED260/CW PSU GM G2	26,000 lm	6500 K
911401640607	BY239P LED260/NW PSU GM G2	26,000 lm	4000 K

Operating and Electrical

Order Code	Full Product Name	Power Consumption
911401639907	BY239P LED80/CW PSU GM G2	60 W
911401640007	BY239P LED80/NW PSU GM G2	60 W
911401640107	BY239P LED130/CW PSU GM G2	100 W
911401640207	BY239P LED130/NW PSU GM G2	100 W
911401640307	BY239P LED195/CW PSU GM G2	150 W
911401640407	BY239P LED195/NW PSU GM G2	150 W
911401640507	BY239P LED260/CW PSU GM G2	200 W
911401640607	BY239P LED260/NW PSU GM G2	200 W

Initial Performance (IEC Compliant)

Order Code	Full Product Name	Initial chromaticity
911401639907	BY239P LED80/CW PSU GM G2	(0.316, 0.332) SDCM<5
911401640007	BY239P LED80/NW PSU GM G2	(0.385, 0.380) SDCM<5
911401640107	BY239P LED130/CW PSU GM G2	(0.316, 0.332) SDCM<5
911401640207	BY239P LED130/NW PSU GM G2	(0.385, 0.380) SDCM<5
911401640307	BY239P LED195/CW PSU GM G2	(0.316, 0.332) SDCM<5
911401640407	BY239P LED195/NW PSU GM G2	(0.385, 0.380) SDCM<5
911401640507	BY239P LED260/CW PSU GM G2	(0.316, 0.332) SDCM<5
911401640607	BY239P LED260/NW PSU GM G2	(0.385, 0.380) SDCM<5

© 2026 Signify Holding. All rights reserved. The information provided herein is subject to change, without notice. Signify does not give any representation or warranty as to the accuracy or completeness of the information included herein and shall not be liable for any action in reliance thereon. The information presented in this document is not intended as any commercial offer and does not form part of any quotation or contract, unless otherwise agreed by Signify. Philips and the Philips Shield Emblem are registered trademarks of Koninklijke Philips N.V.