PHILIPS

DN065B G4 LED12/840
12W 220-240V D150 RD

929003250632



Ledinaire SlimDownlight, 12 W, D150 mm, 1200 lm, 4000 K, Beam angle 110°, White, IP20/40

D150 mm, Metal–Plastic, White, Power supply unit (On/Off), 1200 lm, 12 W, 100 lm/W, 4000 K, (0.38, 0.38) SDCM≤5, Beam angle 110°, IP20/40 | Finger-protected;Wire-protected, IK03 | 0.3 J, Safety class II, Screw connection block 2-pole

General Information

Light source replaceable	No
Driver included	Yes
Light source engine type	LED
Lighting Technology	LED
Mounting	Recessed
Value ladder	Value
Warranty period	3 years

Light Technical

Luminous Flux	1,200 lm
Correlated Color Temperature (Nom)	4000 K
Luminous Efficacy (rated) (Nom)	100 lm/W
Color rendering index (CRI)	80
Light source color	840 neutral white
Optic type	Beam angle 110°

Luminaire light beam spread	110°
Unified glare rating CEN	28
Photobiological safety according to EN 62471	RG0

Operating and Electrical

Input Voltage	220 to 240 V
Line Frequency	50 or 60 Hz
Input Frequency	50 or 60 Hz
Inrush current	3.85 A
Power Consumption	12 W
Power Factor (Fraction)	0.9
Connection	Screw connection block 2-pole
Number of products on MCB of 16 A type B	74
Suitable for random switching	Yes
Protection class IEC	Safety class II
Total harmonic distortion	30 %

Controls and Dimming

Dimmable	No
Driver/power unit/transformer	Power supply unit (On/Off)
Constant light output	No

Mechanical and Housing

Housing Material	Metal–Plastic
Reflector material	-
Housing Color	White
Overall length	175 mm
Overall width	175 mm
Overall height	45 mm
Overall diameter	175 mm
Dimensions (Height x Width x Depth)	45 x 175 x 175 mm
Ingress protection code	IP20/40 [Finger-protected;Wire-protected]
Mech. impact protection code	IK03 [0.3 J]
Mounting	Recessed
Net Weight (Piece)	0.210 kg

Approval and Application

Flammability mark	For mounting on normally flammable surfaces
CE mark	Yes
EU RoHS compliant	Yes
Flickering value (PstLM) - Flickering value as per EN 61000-3-3	0.7
Stroboscopic effect visibility measure (SVM)	0.4
Ambient temperature range	-20 to +40 °C

Initial Performance (IEC Compliant)

Luminous flux tolerance	+/-10%
Initial chromaticity	(0.38, 0.38) SDCM≤5
Power consumption tolerance	+/-10%
Standard Deviation of Colour Matching (McAdam ellipse)	SDCM≤5

Over Time Performance (IEC Compliant)

Lumen maintenance (EN-IEC 62722-2-1) at median useful life* 50000 h	L65

Sustainability Data

Repair class	Repair Class D, this product is not designed to be repaired.
Non-virgin material ratio of the packaging	Cardboard > 80% recycled
Packaging Recyclable content ratio	Cardboard recycling rate > 80%
Packaging Material	Cardboard

Product Data

Order product name	DN065B G4 LED12/840 12W 220-240V D150 RD
Full product name	DN065B G4 LED12/840 12W 220-240V D150 RD
Full product code	871951446429200
Order code	929003250632
Material Nr. (12NC)	929003250632
Numerator - Quantity Per Pack	1
EAN/UPC - Product/Case	8719514464292
Numerator - Packs per outer box	12
EAN/UPC - Case	8719514464308

Dimensional drawing

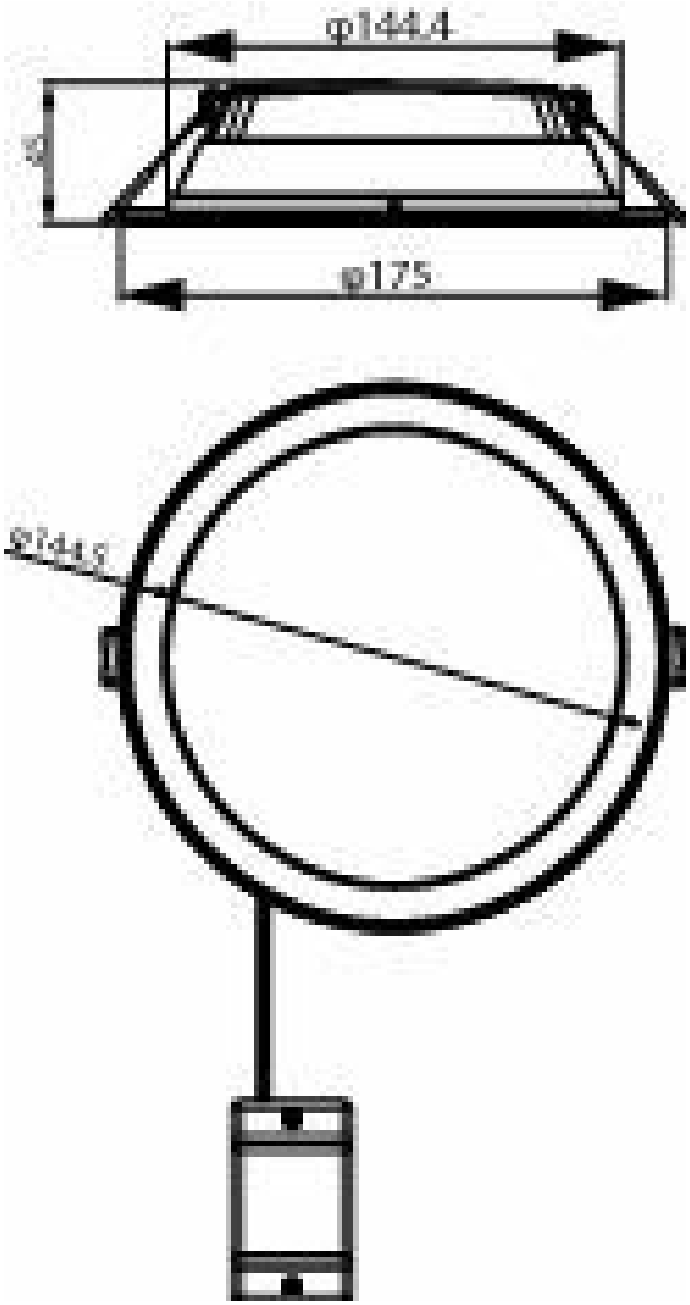

Photometric data

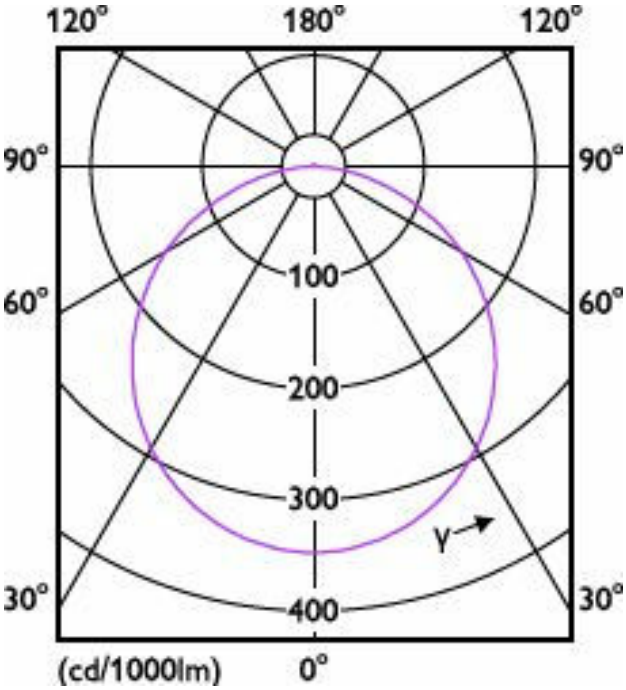

Light Distribution Diagram - DN065B G4 LED12/840 12W 220-240V D150 RD

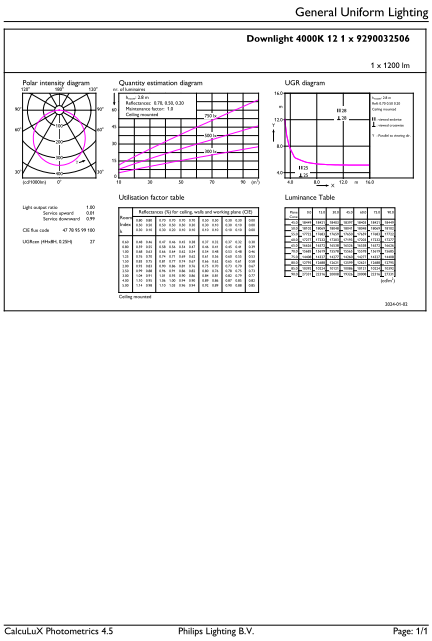

General uniform lighting - DN065B G4 LED12/840 12W 220-240V D150 RD

Compatible Accesories

Accessory Image	Accessory Code	Accessory Name	Website
	929003311602	DN065B G4 Trim Accessory D150 BK	Product Website
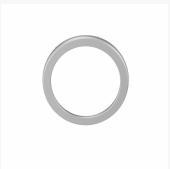	929003313002	DN065B G4 Trim Accessory D150 SI	Product Website

Related Documents

Documents and certificates	Document Name	Download
Installation Instructions	Downlight_DN065B_G4_324165985691_V2_Online-INI.pdf	Download
Environmental Product Declaration	EPD-Philips-DN065B-G4-LED12-840-12W-220-240V-D150-RD-929003250632-20240730.pdf	Download

Photometry and lighting design	Document Name	Download
IES File	DN065B-G4-LED12-840-12W-D150-RD-IES.ies	Download

© 2026 Signify Holding. All rights reserved. The information provided herein is subject to change, without notice. Signify does not give any representation or warranty as to the accuracy or completeness of the information included herein and shall not be liable for any action in reliance thereon. The information presented in this document is not intended as any commercial offer and does not form part of any quotation or contract, unless otherwise agreed by Signify. Philips and the Philips Shield Emblem are registered trademarks of Koninklijke Philips N.V.