PHILIPS

ST151T LED30S/940 WB BK

911401847082



CoreLine Projector gen2, Track-mounted, 27 W, D80 mm, 3000 lm, 4000 K, CRI>90, Wide beam, Black

Track-mounted, D80 mm, Aluminum, Black, Power supply unit (On/Off), 3000 lm, 27 W, 110 lm/W, 4000 K, (0.3837, 0.3828) SDCM <4, CRI>90, Wide beam, Polycarbonate, IP20 | Finger-protected, IK03 | 0.3 J, Safety class I, 3C Track

Warnings and Safety

- The luminaire should be mounted outside of arm's reach
- The luminaire should be installed by a qualified electrician and wired in accordance with the latest IEE electrical regulations or the national requirements

General Information

Light source replaceable	No
Number of gear units	1 unit
Driver included	Yes
Sustainability rating	Unclassified
Service tag	No
Lighting Technology	LED
Value ladder	Performance
Warranty period	5 years

Light Technical

Luminous Flux	3,000 lm
Saturated Red (R9)	>50
Correlated Color Temperature (Nom)	4000 K
Luminous Efficacy (rated) (Nom)	110 lm/W
Color rendering index (CRI)	>90
Beam angle of light source	38 degree(s)
Light source color	940 neutral white
Optic type	Wide beam
Luminaire light beam spread	38°
Unified glare rating CEN	20

Operating and Electrical

Input Voltage	220 to 240 V
Line Frequency	50 or 60 Hz
Initial CLO power consumption	27 W
Average CLO power consumption	27 W
Inrush current	43.8 A
Inrush time	0.0115 ms
Power Consumption	27 W
Power Factor (Fraction)	0.9
Connection	3C Track
Cable	-
Number of products on MCB of 16 A type B	30
Suitable for random switching	Yes
Protection class IEC	Safety class I
Total harmonic distortion	20 %

Controls and Dimming

Dimmable	No
Driver/power unit/transformer	Power supply unit (On/Off)
Constant light output	No
Maximum dim level	Not applicable

Mechanical and Housing

Housing Material	Aluminum
Reflector material	-
Optic material	Polycarbonate
Optical cover material	Polycarbonate
Fixation material	-
Housing Color	Black
Optical cover finish	-
Overall length	207 mm
Overall width	87 mm
Overall height	125 mm
Overall diameter	80 mm
Dimensions (Height x Width x Depth)	125 x 87 x 207 mm
Ingress protection code	IP20 [Finger-protected]
Mech. impact protection code	IK03 [0.3 J]
Net Weight (Piece)	0.510 kg

Approval and Application

Glow-wire test	Temperature 650 °C, duration 30 s
Flammability mark	-
CE mark	Yes
ENEC mark	ENEC mark
Photobiological risk	Photobiological risk group 0 @200mm to EN62778
Photobiological risk specification	0.2 m
EU RoHS compliant	Yes
Performance ambient temperature Tq	25 °C
Flickering value (PstLM) - Flickering value as per EN 61000-3-3	1
Stroboscopic effect visibility measure (SVM)	1.6
Ambient temperature range	-20 to +40 °C

Initial Performance (IEC Compliant)

Luminous flux tolerance	+/-10%
Initial chromaticity	(0.3837, 0.3828) SDCM <4
Power consumption tolerance	+/-10%
Standard Deviation of Colour Matching (McAdam ellipse)	SDCM≤4

Over Time Performance (IEC Compliant)

Control gear failure rate at median useful life 50000 h	5 %
Lumen maintenance (EN-IEC 62722-2-1) at median useful life* 50000 h	L70

Sustainability Data

Repair class	Repair Class D, this product is not designed to be repaired.
Embedded carbon (A1-A3)	9.88 kg CO_2e
Product non-virgin material ratio	6.63 %
Recyclable content ratio of the finished product	37.7 %
GWP total B6 (kg CO2eq) Declared Unit	Please calculate using your local energy mix value: Power Declared Unit (kW) * Service life (hrs) Declared Unit * Energy mix (kg CO2eq / kwh)
GWP total B6 (kg CO2eq) Functional Unit	Please calculate using your local energy mix value: Power Declared Unit (kW) * 1000 (lm) /lumen output (lm) Declared Unit * 35000 (hrs) * Energy mix (kg CO2 eq / kwh)
Non-virgin material ratio of the packaging	Cardboard > 80% recycled
Packaging Recyclable content ratio	Cardboard recycling rate > 80%
Packaging Material	Cardboard

Dimensional drawing

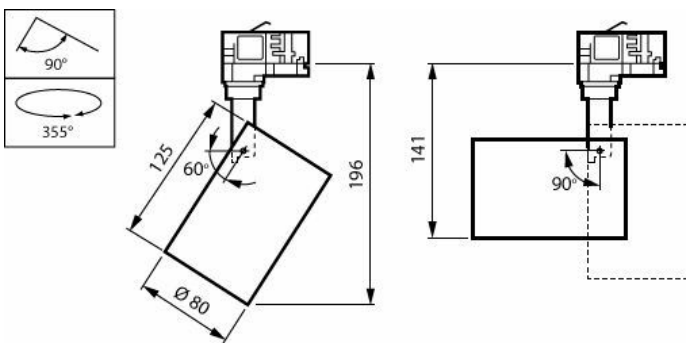

Product Data

Order product name	ST151T LED30S/940 WB BK
Full product name	ST151T LED30S/940 WB BK
Full product code	871951452860499
Order code	911401847082
Material Nr. (12NC)	911401847082
Numerator - Quantity Per Pack	1
EAN/UPC - Product/Case	8719514528604
Numerator - Packs per outer box	10
EAN/UPC - Case	8719514528680

Polar normal diagrams

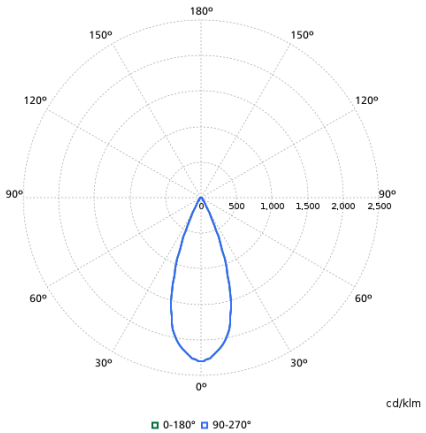

Related Documents

Documents and certificates	Document Name	Download
Environmental Product Declaration	EPD-Philips-CoreLine-Projector-gen2-ST151T-LED30S-940-WB-BK-911401847082.pdf	Download
Installation Instructions	MI CoreLine Projector gen2_ST151T-INI Sep 2021.pdf	Download

Photometry and lighting design	Document Name	Download
IES File	st151t-led30s-940-wb-bk-911401847082.ies	Download
LDT File	st151t-led30s-940-wb-bk-911401847082.ldt	Download
ROLF File	st151t-led30s-940-wb-bk-911401847082.rolfz	Download
ULD File	st151t-led30s-940-wb-bk-911401847082.uld	Download
Revit file	st151t-led30s-940-wb-bk-911401847082.zip	Download

© 2026 Signify Holding. All rights reserved. The information provided herein is subject to change, without notice. Signify does not give any representation or warranty as to the accuracy or completeness of the information included herein and shall not be liable for any action in reliance thereon. The information presented in this document is not intended as any commercial offer and does not form part of any quotation or contract, unless otherwise agreed by Signify. Philips and the Philips Shield Emblem are registered trademarks of Koninklijke Philips N.V.