PHILIPS

LED Transformers

Constant Voltage Drivers

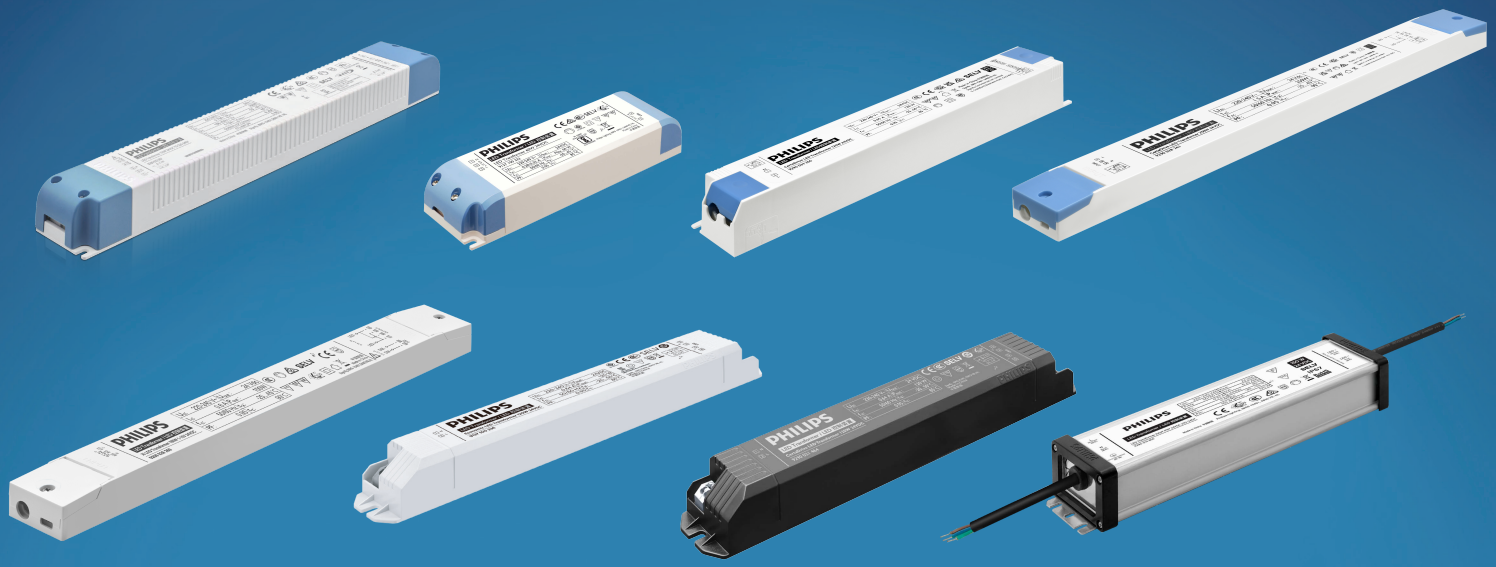

Design-in Guide

Enabling **future-proof LED technology** for dynamic LED markets

No 2025

Contents

Introduction to this guide 3
Applications 3
Information and support 3
Design-in support 3

Safety precautions 4
Safety warnings and installation instructions 4
Philips Design-in support 5

Electric Design in 6
Introduction 6
How to... Select an appropriate driver 8
Driver wiring and connections 8
Connectors 9
How to... Use wires and cables 9
Mains voltage fluctuations and behavior 10
Inrush current 10
How to... Determine the number of drivers on a MCB 11
Surge protection 12
Touch current 12
Electromagnetic compatibility (EMC) 12
How to... Improve EMI performance 12

Thermal design-In 14
Introduction 14
How to... Measure Tc at the Tc point 15
Relation between Tc and ambient temperature 16
Driver lifetime 16

Controllability 16
Control characteristics 16
1-10 V Dimming 16
TD dimming: Touch and Dim & DALI 16

Quality and reliability 19
Switching & cycling lifetime of LED drivers 19
Electrical failures due to switching Vmains on and off 19
Mechanical failures due to thermal cycling 19
Compliance and approval 22
System Disposal 22

Disclaimer 23

WEEE statement 24

Introduction to this guide

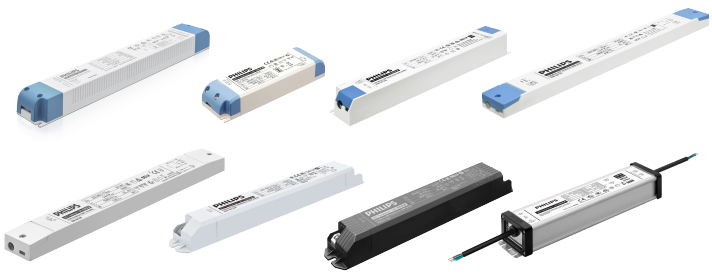

Thank you for choosing the Philips constant voltage drivers. In this guide you will find the information needed to integrate these drivers into a LED luminaire or LED system. We advise you to consult our websites for the latest up-to-date information.

Applications

The Philips constant voltage drivers are designed to operate 24VDC LED solutions used both in built-in and independent applications such as refrigerated display lighting, retail display lighting and linear accent lighting. They are specifically designed to ensure good performance with high robustness combined with a long lifetime. In addition, the IP67 drivers are designed for outdoor environment applications such as signage and flood lighting. If you use Philips constant voltage drivers in combination with Philips LED loads, specific design-in guides are available from the below mentioned technology websites.

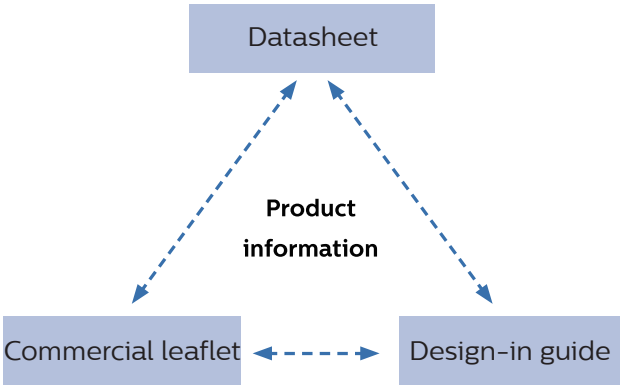

Information and support

Downloads and information

Please consult your local Philips office or visit:
www.philips.com/technology

Design-in support

On request Design-in support from Philips is available. For this service please contact your Philips sales representative.
Determine which documents contain what information. In order to provide information in the best possible way, Philips' philosophy on product documentation is the following.

- Commercial leaflet contains product family information & system combinations
- Datasheet contains the product specific specifications
- Design-in guide describes how the product is to be designed-in

All these documents can be found on the download page of the OEM website www.philips.com/technology. If you require any further information or support please consult your local Philips office.
If you require any further information or support please consult your local Philips office.

Safety precautions

Warnings:

- Avoid touching live parts!
- Do not use drivers with damaged housing and/or connectors!
- Do not use drivers with damaged wiring!
- Class I luminaires must be connected to protective earth!
- Switchable function to make the open load on the driver output is abnormal condition, it is not an intended application that be allowed.

Safety warnings and installation instructions

To be taken into account during design-in and manufacturing

- Do not use damaged or defective contacts or housings.
- Do not use damaged products
- Cap off all unused wires to prevent accidental contact with the luminaire, driver housing or accidental touching
- Do provide an adequate earth connection when applicable
- The luminaire manufacturer is responsible for its own luminaire design and has to comply with all relevant safety standards when adopt with Philips drivers
- Except IP family, the Philips constant volage drivers are intended for indoor use and should not be exposed to the elements such as snow, water and ice. It is the luminaire manufacturer's responsibility to prevent exposure.
- For driver installation, proper screws should be chosen according to driver mounting holes. The recommend torque for screws is 0.6N.m.
- For the strain relief cap installation, Crosshead PH-2 Screw is recommended to be used, recommended torque requirement for screw is 0.5 N.m.
- In case driver being used for the independent application, make sure to keep the driver dry, acid free, oil free, fat free and at least 20mm distance from the body which is not the mounting surface to wall for the sufficient thermal dissipation and do not exceed the maximum ambient temperature (ta) stated on the device

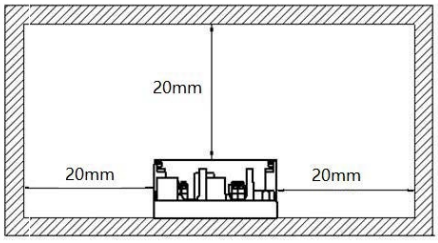

Special remarks about RCM certification:
There are three types of applications in Australia/ New Zealand, "IC", "Do not Cover", and "Non IC". Please refer to product label for details.

IC classification 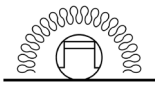

An independent controlgear that can be abutted against normally flammable materials, including building insulation, and can be covered in normal use. Building elements, building insulation or debris have restricted access to the heated parts of the controlgear.

Do-not-cover classification 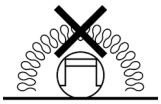

An independent controlgear that can be used where normally flammable materials, including building insulation, are or may be present, but cannot be abutted against any material and cannot be covered in normal use.The control gear is suitable to abut normally flammable materials and to be covered by insulation inadvertently.

Non IC classification (no mark)

An independent controlgear that cannot be abutted against or covered by normally flammable materials or used in installations where building insulation or debris is, or may be, present in normal use.

Philips Design-in support is available; please contact your Philips sales representative.

Electric Design in

Introduction

Philips Constant Voltage LED drivers are designed to operate LED solutions for general lighting applications such as lighting in office, retail, ambient lighting and industry applications. Reliability is underpinned with 2~5 year warranty (depends on different families), enhanced by specific features that protect the connected LED module, e.g. reduced ripple current and thermal de-rating.

In the coming years LEDs will continue to increase in efficiency, creating generation and complexity challenges for OEMs. With Philips Constant Voltage LED drivers, flexibility in luminaire design is assured. It provides the stable lumen output and light quality levels that lighting specifiers and architects demand. The remarkable energy savings and CO^2 reductions achieved with LED lighting can be further extended with dimming.

Philips Constant Voltage LED drivers offer a range of dimming options. The 1-10V interface allows for simplified, one-way management, while the DALI interface makes any installation with the Constant Voltage LED drivers ready for a fully networked control system.

Alternatively these Dali drivers also are suitable to interface with Touch and Dim dimming.

Philips constant voltage driver versions

The Philips constant voltage drivers described in this guide are available in different versions, e.g. non-dimmable (Xitanium Transformer, CertaDrive Transformer and Economic Transformer) and dimmable (1-10 V, Touch and Dim & DALI (TD)), the IP67 CV drivers are designed for outdoor applications. All these products come in a wide range of power ratings that enable the most popular light output levels for general lighting applications. We recommend you always check our constant voltage LED driver commercial leaflet for the most up-to-date overview of our range. This leaflet can be found on the download section of www.philips. com/technology.

Controllability

The Philips constant voltage LED drivers are available in 3 different versions:

- Non-dimmable
- 1-10 V dimming
- Touch and Dim & DALI (TD)

Hot wiring

Some of constant voltage drivers within the statement and performance segments can be serviced, connected or disconnected from the LED load when the mains voltage is connected. Please make sure that all electrical safety regulations
are followed when working on a constant voltage driver while powered.

Explanation of Constant Voltage Driver Name

Xi LED Transformer: Xitanium constant voltage reliable LED drivers with 5 years warranty
60W : Maximum output power
24VDC : Output voltage
TD : Dimming protocol (Touch & Dali)
230V : Mains AC input voltage

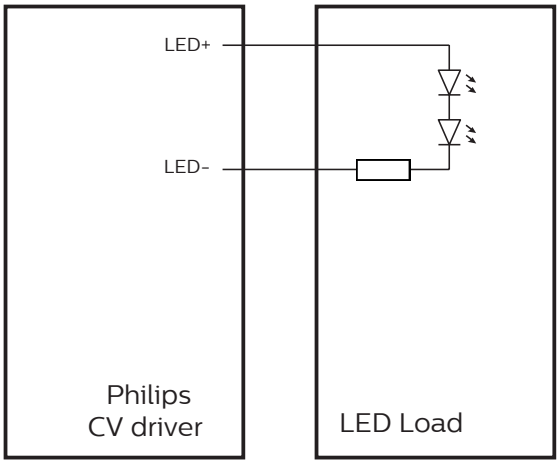

Schematically representation of the driver's output interfaces

How to... Select an appropriate driver

Depending on your requirements several drivers can be found as a solution for you.
For a full overview of available driver models, approach the download section of www.philips.com/technology. To check datasheets associated with the drivers you intend to use.

24V CV drivers can provide a typical 24VDC to LED loads. However the output voltage has 5% tolerance range(claimed 22.8 ... 25.2V on datasheets). LED load voltage should be in accordance with driver output voltage.

CV drivers are designed per IEC requirements for performance and operational safety with respect to specified running condition range on datasheets. Operational range is the applicable condition for CV driver workable. For optimal luminaire performance it is always recommended to operate drivers within specified condition performance range.

Driver wiring and connections

Examples of driver lead wires with corresponding functions can be seen in the figure on the left. Please check the driver's pinning in the associated datasheet on www.philips.com/technology. The function of each wire will be discussed further in detail in the following chapters.

Single channel driver

All the Philips constant voltage LED drivers are single channel drivers. This means for drivers with a double "+" and "–" output that these outputs are in parallel inside the driver. So driver has only one channel output.

Connectors

Different connectors are used on the Philips constant voltage drivers. More info about the type of connector and wiring (diameter, length, etc.) can be found in the datasheet. The datasheets of each driver can be downloaded via www.philips.com/technology.



Connectors
Recommend torque for screws is 0.3N.m

Mains Connectors

Mains connectors are used to connect the drivers to the mains. The connector for PE is connected to protective earth (if present).

DALI – Touch Dim Connectors

Push-in connectors are used to connect the DALI or Touch Dim connection wires to the Dimmable DALI constant voltage driver.

LED Connectors

LED connectors are used to connect the LED loads. Some drivers may have 2-3 pairs of LED+/- connectors. It is used for connect LED stripes in parallel. If LED load is connected to one pair of connectors only. Please calculate the LED current and make sure the wire diameters of LED loads are in accordance with the current.

How to... Use wires and cables

In the datasheet of the driver you use it is stated what

- Wire diameters are accepted
- Strip length of the wires are accepted
- Up to what wire length the drivers are tested on EMC

Direct wiring between driver and LED Loads

Be informed that no components are allowed between the LED driver and LED boards other than connectors and wiring intended to connect the LED driver to the LED board. For example it is not allowed to install a switch between the driver and LED Loads.



Strain Relief Cap
Screws must be fastened with 0.5N.m torque. The input cable clamp supports cable diameters between 3.5 ... 8mm.
The output cable clamp supports cable diameters between 3 ... 8mm.

Strain Relief Cap

CV drivers can be adapted for use in independent applications by using a strain relief cap. This will ensure that the driver is thermally protected and safe to use in ceilings.

Mains voltage fluctuations and behavior

The driver is able to withstand high and low mains voltages for limited periods of time. See the associated datasheets for specific values.

Allowable voltage difference between mains input and control input (TD version)

The majority of our LED-drivers do comply with a voltage isolation difference up to 250V between mains and the Touch and Dim control input, as can be caused by a different phase of the power grid in an installation in the field.
Future drivers might have a value higher than 250V by design.

Low mains voltage

A continuous low AC voltage (<198 V) can have an adverse effect on the driver's lifetime. The output power will be limited accordingly. A low voltage will not cause the driver to fail over a maximum period of 48 hours at minimum operating AC voltage and maximum driver ambient temperature.

High mains voltage

A high mains AC voltage will stress the driver and have an adverse effect on its lifetime (maximum of 264-305 V for a period of 48 hours).

Inrush current

'Inrush current' refers to the briefly occurring high input current which flows into the driver during the moment of connection to mains; see the illustration on the left. Typically, the amplitude is much greater than the steady-state input current.
The cumulative inrush current of a given combined number of drivers may cause Mains Circuit Breakers (MCB) to trip. In such a case, either one or a combination of the following measures need to be taken to prevent nuisance tripping:

1: Replace existing MCB for a less sensitive type (e.g. exchange B type for C type)
2: Distribute the group of drivers over multiple MCB groups or phases

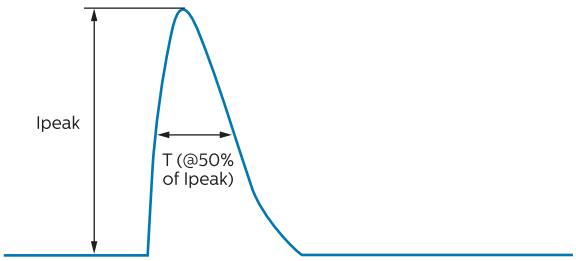

Graphical representation of inrush current

MCB type	Rating (A)	Relative number of LED drivers (%)
B	4	25
B	6	40
B	10	63
B	13	81
B	16	100 (reference)
B	20	125
B	25	156
B	32	200
B	40	250
C	4	42
C	6	63
C	10	104
C	13	135
C	16	170
C	20	208
C	25	260
C	32	340
C	40	415
D	4	80
D	6	130
D	10	210
D	13	280
D	16	350
D	20	470
D	25	550
D	32	700
D	40	940
L, I	16	108
L, I	10	65
G, U, II	16	212
G, U, II	10	127
K, III	16	254
K, III	10	154

The max. recommended amount of drivers in the table above is based on inrush current and only serves as guidance. The actual maximum amount in the application may differ; it is dependent on steady-state current, MCB brand/type and inherent MCB tolerances.

3: Power up drivers sequentially instead of simultaneously
4: Install external inrush-current limiting devices

Inrush parameters are driver-specific an can be found in the driver datasheet at www.philips.com/technology.

How to... Determine the number of drivers on a MCB

The maximum amount of drivers on a 16A type B Miniature Circuit Breaker (MCB) is stated in the driver's datasheet on www.philips.com/technology.
In the conversion table on the left that stated amount is used as reference (100%). The maximum quantity of drivers on different types of MCB can be calculated by the reference (see driver's datasheet) x Relative number (last column).

Example:
If datasheet states: max number on type B, 16 A = 20, then for type C, 13 A the value will be 20 x 135% = 27.

Notes:

1. Data is based on a mains supply with an impedance of 400mΩ (equal to 15 m of 2.5 mm2 cable and another 20 m to the middle of the power distribution) in the worst-case scenario. With an impedance of 800mΩ the number of drivers can be increased by 10%.
2. Measurements will be verified in real installations; data is therefore subject to change.
3. In some cases the maximum number of drivers is not determined by the MCB but by the maximum electrical load of the installation.
4. Note that the maximum number of drivers is given when these are all switched on at the same time, e.g. by a wall switch.
5. Measurements were carried out on a single-pole MCB. For multiple MCBs it is advisable to reduce the number of drivers by 20%.
6. The maximum number of drivers that can be connected to one 30 mA Residential Current Detector is 30.

Surge protection

The Philips constant voltage drivers have built-in surge protection up to a certain limit. Depending on the mains connected, additional protection against excessive high surge voltages may be required by adding a Surge Protection Device. The actual limit can differ per driver and can be found in the driver's datasheet in the download section on www.philips.com/technology.

Touch current

The Philips constant voltage LED drivers are designed to meet touch current requirements per IEC 61347-1 standard or/and UL 8750 standard. The specified maximum values are 0.7 mA peak for IEC and 0.75 mA RMS for UL norms. The test is done with the driver alone. In a luminaire, touch current may be higher, since the LED load may introduce additional touch current. As such, precautions may be required on the luminaire level and if multiple drivers are used in a single luminaire.

Electromagnetic compatibility (EMC)

Philips constant voltage LED drivers meet EMC requirements per CISPR 15. The test is conducted with a reference setup that includes a driver and a LED load mounted on a plate. Because there are many different LED strips in the market, it may have impacts on EMI performance of CV LED systems in filed. If any questions about EMI, please contact your local Philips representative.

How to... Improve EMI performance

As mentioned before, the total amount of parasitic current needs to be minimized. For that reason, the following practical precautions need to be taken into account in a lighting system to minimize EMI:

- Minimize the Differential Mode loop area of the lamp wires going from the driver to the light source by keeping the wires close together (bundling). This will minimize the magnetic field and reduce the radiated EMI. Long linear light sources are also part of that loop.

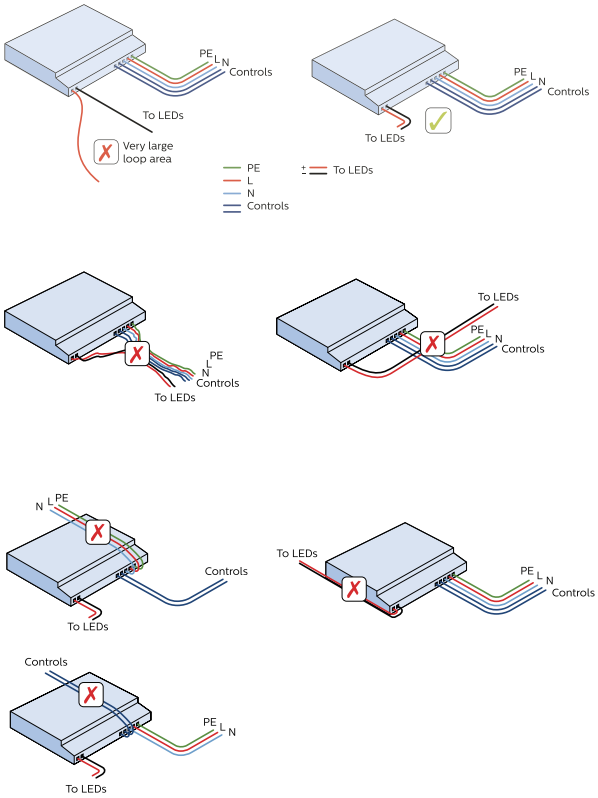

- Minimize the Common Mode parasitic capacitance of the output wiring + light source to earth by keeping the length of the wires between driver and light source as short as possible. Also minimize the copper cooling area on the LED PCB and keep the length of the incoming mains wire inside the luminaire as short as possible.
- Keep mains and control wires (DALI, 0-10V) separated from the output wires (do not bundle).
- Ground the lighting system chassis and other internal metal parts to earth (class I luminaires) and do not let large metal parts “float”. Always use the safety or functional earth connector or wire from the lamp driver. Or use equipotential connecting wires for all internal floating metal parts which are inaccessable (class II luminaires). Keep safety and functional earth wires as short as possible to minimize their inductance, use as much as possible large metal areas (chassis, mounting plates, brackets) for earthing purposes instead.
- For Class II it is advised to establish a functional earth connection between all larger conductive, non-accessible luminaire parts and the driver to remedy potential EMC problems.
- Sometimes, radiated EMC compliance cannot be achieved in system, necessitating the use of a 100 … 300 Ω axial ferrite bead(s) for either mains or lamp wiring
  (effective for interference between 30 MHz and 300 MHz), or coupling the wires through ferrite cores within the luminaire may improve the overall EMC performance. However, selection of the type and characteristics of the additional filter depends on what frequency components have to be damped and by how much.

Adhering to these rules will help in EMC compliance. For further questions, please contact your local Philips representative. Alternatively the Philips Lighting OEM Design-In team could be consulted for a possible solution.

Thermal design-In

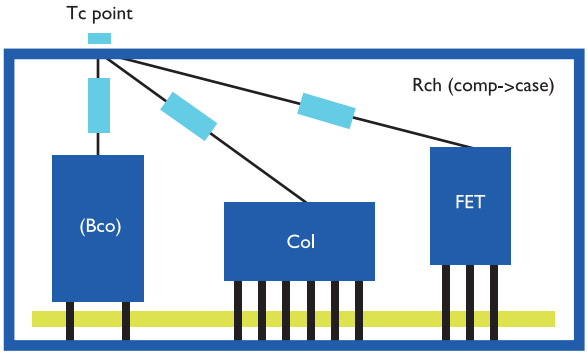

Schematically representation of internal thermal paths to the bridge box Tc point



Example of Tc point position on CV drivers

Introduction

The CV driver itself and relationship between case temperature point (Tc) and lifetime of the CV driver. To facilitate design-in of CV drivers, the critical thermal management points of the CV drivers are set out in this section. In Philips' product design phase all possible precautions have been taken to keep the component temperature as low as possible. However, the design of the luminaire and the ability to guide the heat out of the luminaire are of utmost importance. If these points are taken into account this will ensure the optimum performance and lifetime of the system.

Definitions

- Case temperature: temperature measured at the Tc point of the CV driver
- Ambient temperature (Ta): temperature outside the driver

When switched off >2 hours, temperature at Tc point is likely to equal Ta

Tc point

To achieve optimal lifetime and reliability, it is critical that the temperature of the components in the driver remains within its rating.

The Tc test point (case temperature) indicates a reference point for measuring the driver's temperature. This can be used during the luminaire design to verify that the temperature remains below the maximum specified temperature for the Tc point. Since there is a direct relation between the case temperature (Tc) and the components inside the driver, it is sufficient to measure the temperature at the Tc point of the driver. This Tc point must not exceed the maximum values stated in the associated datasheets.

The temperatures as stated above are only valid for a situation where the driver is only cooled via the bottom surface.

How to... Measure Tc at the Tc point

The location of the Tc point is identified on the product label. Tc point is inside the dot (See ellipse in figure on the left). The temperature can be measured using for example a thermocouple that is firmly glued to the driver housing. For a representative measurement the temperature must be stable before any reliable data can be obtained (typically > 4 hours).

Relation between Tc and ambient temperature

The Tc increases by approximation linear with the ambient temperature (Ta). The temperature offset between Ta and Tc depends on the thermal design of the luminaire. For approved ambient temperature range please check the associated driver datasheet on www.philps.com/technology.

Driver lifetime

Tc, Tc-life and Tc-max

The lifetime of LED drivers depends on the temperature during operation. This means there is a relationship between the Tc point on the LED driver and its lifetime in hours.

- Xitanium CV drivers typically have a specified minimum lifetime of ≥50,000 hours with a minimum of 90% survivals at the specified Tc-life.
- CertaDrive CV drivers typically have a specified minimum lifetime of ≥30,000 hours with a minimum of 90% survivals at the specified Tc-life.
- Economic CV drivers typically have a specified minimum lifetime of ≥20,000 hours with a minimum of 90% survivals at the specified Tc-life.

Tc-max is the maximum allowed Tc for the driver. Please check the driver's datasheet in the download section on www.philips.com/technology for the lifetime and Tc-life.

Controllability

Instructions shall be provided with controlgear that have FELV control terminals that state the following:

WARNING: FELV terminals marked "Risk of electric shock" are not safe to touch.



Danger: electricity

WARNING: Circuits connected to any FELV control terminal shall be insulated for the LV supply voltage of the controlgear and terminals connected to the FELV circuit shall be protected against accidental contact.

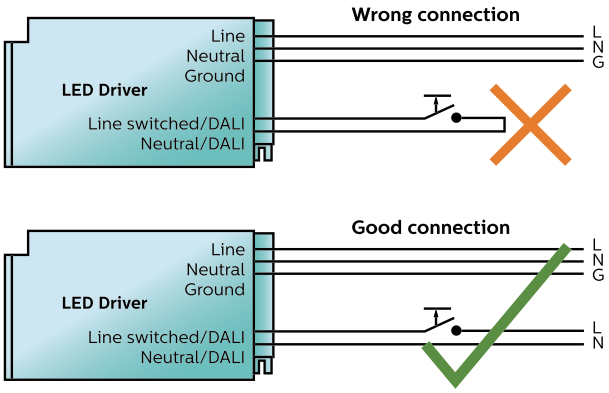

Appropriate connection to the dimmable LED driver using the Touch and Dim protocol

Control characteristics

Amplitude Modulation dimming

Some CV Drivers dim by means of PWM dimming (Pulse Width Modulation). Operation over the entire dimming range. The driver's actual dimming range is stated in the associated datasheet on www.philips.com/technology.

1-10 V Dimming

This is the traditional way of dimming a driver between 100% and 10% based on dimming voltage, in 1% increments. Note that the 100% level is determined by the output current level, set via external Rset (AOC feature). The minimum current that can be supplied by the driver is specified in the datasheet. The lowest possible dim level is defined by the higher of the two values:
Minimum output current or 10% dim level. Output current of the 1-10 V control input is typical 150 µA.

TD dimming: Touch and Dim & DALI

DALI

Digital Addressable Lighting Interface, or DALI, is a bi-directional digital communication protocol popular in the lighting industry. It is an IEC standard and there are many control devices from Philips and other manufacturers that communicate using DALI.
The voltage across DALI wires is typically 16 V (refer IEC specification for details) and it is not polarity sensitive. The DALI wires can be run alongside input main wires and the maximum current on a DALI line is limited to 250 mA. Philips Xitanium LED drivers feature 12-bit or greater dimming resolution for LED light.

Using DALI, it is possible to send dimming commands (1-254 levels), set fade rates and fade times, query driver or LED status, etc. drivers also respond to LED-specific DALI commands e.g. query if the LED module is short circuit or open circuit; select between logarithmic or dimming curves, etc. Typically up to 64 DALI drivers can be connected to one DALI bus. Note that after a power cycle (not stand-by) the driver by default will come back to its last known light level. This behavior however can be programmed differently into "off" or any dim level between 1..254 DALI level.

For more information on DALI, refer to the IEC specification for DALI protocol.

- IEC 62386: 102 – General requirements – Control gear
- IEC 62386: 207 – Particular requirements for control gear – LED modules.

Touch and Dim

For the Xitanium drivers with Touch and Dim function a switched mains is used to dim the light. The switching ON and OFF is also done via this control input. This means that it is no longer necessary to use a power switch to interrupt the mains circuit. The 230 V supply voltage is always available at the LED driver (even when switched OFF) and light can be switched or dimmed by momentarily connecting the mains to the dim input. A short push will switch the lighting ON or OFF, depending on the previous situation.

CV DALI Drivers G1

12NC	Driver name
9290 022 00506	LED Transformer 60W 24VDC TD 220-240V
9290 022 00606	LED Transformer 100W 24VDC TD 220-240V
9290 022 00706	LED Transformer 150W 24VDC TD 220-240V

Touch and Dim function	Contact duration	Driver function
Ignore	< 40 ms	Disregard push
Short push	>=40 ms and <500 ms	Toggle the LED ON/OFF
Long push	>=500 ms and <10,000 ms	Dim the LED up or down
Reset push	>10,000 ms	Synchronize drivers

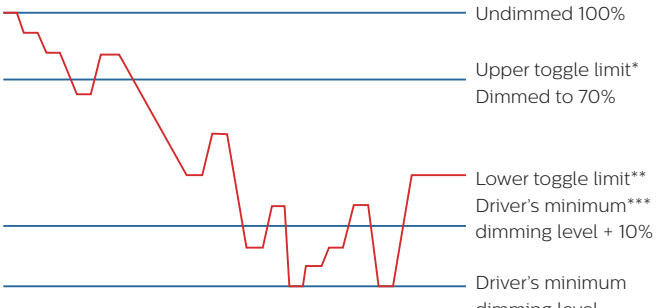

* Always dim down above the upper toggle limit

** Always dim up under the lower toggle limit

*** Example, a driver with dimming minimum of 10% leads to lower toggle level of 10% + 10% = 20% 1% leads to lower toggle level of 10% + 1% = 11%"

Touch and Dim behavior for CV DALI Drivers G1

If via TD control the driver is switched OFF (short push), the driver will store the current light level. As soon as the mains power returns (short push via TD will switch the driver ON) the driver will recall this stored light level. If it was dimmed to 60%, it will come back at 60%.

If the switch is held pushed in, the light will dim up or down, depending on what is opposite from the last dimming direction. The driver will count the number of mains cycles and act on that. If there is a power failure, the driver will store the current light level. As soon as the mains power returns, the driver will recall this stored light level. If it was dimmed to 38%, it will come back at 38%. If it was switched off, it will stay switched off.

If the installation has to be extended by one or more light points / drivers, the dimming direction of the newly connected modules may be different from that of those already connected. To solve this problem a synchronization possibility is built into the drivers and can be called upon at any time. If the switch is pressed for at least 10 seconds all drivers will go to 37% light level and the dimming direction will be set to downwards.

CV DALI Drivers G2

12NC	Driver name
9290 039 19680	Xitanium LED Transformer 30W TD 24VDC
9290 039 19780	Xitanium LED Transformer 60W TD 24VDC
9290 039 19880	Xitanium LED Transformer 100W TD 24VDC
9290 039 19980	Xitanium LED Transformer 200W TD 24VDC

Touch and Dim function	Contact duration	Driver function
Ignore	< 10 ms	Disregard push
Short push	>=10 ms and <600 ms	Toggle the LED ON/OFF
Long push	>=600 ms and <10,000 ms	Dim the LED up or down
Reset push	>10,000 ms	Synchronize drivers

Touch and Dim behavior for CV DALI Drivers G2

To fulfill different customers' requirement, CV DALI Drivers G2 provides different Touch and Dim behavior from CV DALI Drivers G1. Please check the Touch and Dim function details as described in left table.

To ignore disregard push, the first push should be longer than 300ms, then driver enable the Push Mode. After that short push(< 600ms) can switch on/off the LED light. Long push can dim up/down the LED light.

Similar as Gen 1, press the switch over 10,000ms, all the drivers connected to switch will be synchronized. Light level goes to 50% and dimming direction is going down. For Gen 2 CV DALI drivers, TD dimming speed is selectable. Press the switch over 10,000ms, the driver TD dimming speed shifts to 3s from 100% to 1%. Press the switch over 20,000ms, the driver TD dimming speed shifts to 6s from 100% to 1%.

Touch and Dim wiring

Special wiring, such as twisted pairs or special cables, is not required to install a Touch and Dim system. All wiring is standard mains wiring and the switch is a standard push-to-make switch. There is no limit to the length of the dim cable or the number of switches connected. The only limitation is the maximum amount of drivers, which is 30 per dimming unit.

Quality and reliability

Switching & cycling lifetime of LED drivers

Impact of on and off switching on lifetime of electronic drivers in LED systems

In this section a description is presented of the impact of mains voltage switching on the lifetime of electronic drivers in lighting systems. Because switching on and off the lighting has an impact on different failure modes, a distinction has to be made between switching on and off, and thermal cycling.

Electrical failures due to switching Vmains on and off

Before the lighting is switched on in the electronic circuit all capacitors are uncharged. By a simple toggle of the mains voltage all capacitors will be charged, causing peak currents in the circuit.
Inductors react to this by creating peak voltages. Occurrence of peak currents & voltages during starting is inevitable. The circuit design and component selection should be of sufficient quality that no components are overstressed during the starting conditions. If the quality is not sufficient, failures will occur at a certain rate over time. The failure rate will be influenced by usage conditions such as temperature and mains voltage. The failure rate will be further enhanced by irregular mains voltage events such as dips, surges or black outs. For a good quality design all conditions and components are carefully checked. In general LED systems and products are designed to withstand >100,000 switches under the specified use conditions.

Mechanical failures due to thermal cycling

A completely different failure mode which is also due to switching on and off the light is the failure of solder joints, due to thermal cycling. Stresses in solder joints are caused by the differences of the thermal expansion coefficients (CTE's) of printed circuit board, solder and component materials.

Due to heating up and cooling down mechanical stresses build up in the solder, which eventually result in cracking and finally failure of the joint. In most cases failure of one solder joint means the end of the product. The solder joint failure mechanism is also referred to as solder joint fatigue. This is a typical wear out failure mechanism with a negligible failure rate for many years, but for which after the typical lifetime has passed, failures come at an accelerated speed.

The reference for this lifetime is a typical user profile of 10-12 hr usage and up to 3x switching on and off every day.

Impact of thermal cycles per day on the driver lifetime

As the drivers are typically designed to withstand 3 full thermal cycles every day, lifetime will reduce with an increasing cycling frequency. However this reduction will be limited by the heating time of the product in the application. As the heating time of a driver in real applications varies typically between 60 and 120 minutes, maximum and minimum driver temperature will not be reached when the cycling frequency is faster than 60 minutes. Because the solder-joint damage relates to a higher power of the temperature difference between hot and cold condition, the negative effect on lifetime reduces for the higher cycling frequencies. This is expressed in the above graph.

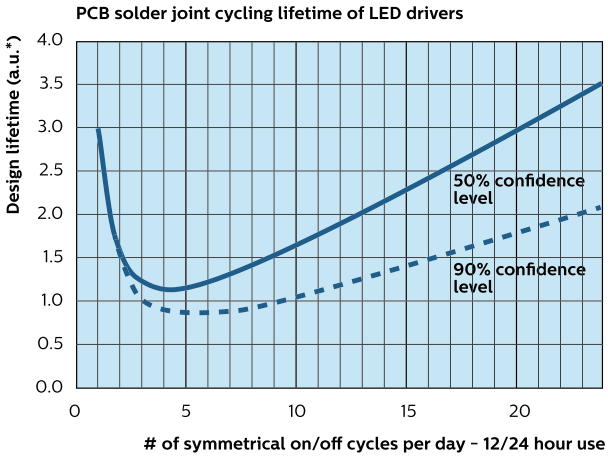

*) arbitrary unit value 1.0 means product design - lifetime will be reached (typical 50,000 h). Longer lifetimes can be limited by other failure modes.

Because of the large variation and differentiation between drivers and applications, it is an impossible task to specify the above graph for every driver and application specifically. Therefore only the critical conditions are listed for which there could be a risk to the cycling lifetime of the driver.

Critical conditions for the driver lifetime due to thermal cycling are:

- Small driver / system (short heating time) without appropriate heat sinking (high T_max).
- Large difference between T_max and temperature in off state T_min (e.g. > 50 °C). See also next paragraph.
- Application @ temperatures < -20 °C T_ambient.

Especially if the above parameters occur in combination with each other there can be a risk for thermal cycling lifetime. To improve cycling lifetime when required, it is most relevant to decrease the T_max by appropriate heat sinking of the driver. As a rule of thumb 10 °C diminished ΔT between Tcase on/off, will add 30% to cycling performance.

Impact of product ambient temperature on cycling performance

In the first approximation the solder joint lifetime is independent of the ambient temperature. The driving parameter for the solder joint failure fatigue is the temperature difference between T_max during the 'on' state and T_min during the 'off' state. The way the driver is built in to a luminaire is very important as this can decrease the temperature difference. Appropriate heat sinking of the driver is the most effective way to improve the driver cycling lifetime. As a rule of thumb 10 °C diminished ΔT between Tcase on/off, will add 30% to cycling performance.

For potted products additional failure mechanisms can occur at temperatures <-20 °C, which can increase the impact of thermal cycling on the product lifetime.

Compliance and approval

Driver compliances and approvals can be found in the published driver Declarations of Conformity (DoC) and ENEC/CB certificates as published on www.philips.com/technology. For further questions please contact your local Philips sales representative.

System Disposal

Please inform yourself about the local waste disposal, separation and collection system for electrical and electronic products and packaging. Please act according to your local rules and do not dispose of your packaging and old product with your normal household waste. The correct disposal of your product will help prevent potential negative consequences for the environment and human health.

Disclaimer

Philips will perform the testing of the LED systems to high standards of workmanship. The tests are carried out with reference to the EN/IEC standards, if any, which are regarded by Philips as being of major importance for the application of the lamp gear and the lamp within the fixture.

The design-in guide, regarding the testing and design in of the LED system provided by Philips, is not an official testing certificate, and cannot be regarded as a document for official release of the fixture. The OEM is liable for the official testing by a certified test body and all markings, such as CE and ENEC marks, on the fixture assembly.

The design-in guide is for information purposes only and may contain recommendations for detecting weak points in the design of the system (lamp – lamp gear – fixture), if any.

Specifically mentioned materials and/or tools from third parties are only indicative: other equivalent equipment may be used but it is recommended that you contact Philips for verification.

Philips will not be liable for unforeseen interactions of the proposed solutions when applied in the fixtures or applications using these fixtures. Philips has not investigated whether the recommendations are or will in the future be in conflict with existing patents or any other intellectual property right. Philips does not warrant that its recommendations are technically or commercially the best options.

Since the Design in tests are only performed on one particular fixture provided by the customer, it will be treated as a prototype. This means that there is no statistical evidence regarding later production quality and performance of the lamp – lamp gear – fixture system.

As Philips does not have control over manufacturing of the fixtures, Philips cannot be held liable for the fixture assembly.

Philips will not accept claims for any damage caused by implementing the recommendations.

No warranty whatsoever may be claimed by the OEM with regard to the content and/or quality of the design-in guide or any other advice, or the conclusions and/or recommendations in the design-in guide or any other document, either express or implied, and Philips expressly disclaims any implied warranties of any kind, including without limitation any warranties of satisfactory quality, fitness for a particular purpose or non-infringement and any warranties regarding the design-in guide or any other advice or the use of the results of any activity performed while testing the fixture with respect to its correctness, quality, accuracy, completeness, reliability, performance or otherwise.

The OEM expressly agrees that test design-in guides are provided by Philips on an ‘as is’ basis and an ‘as available’ basis at customer’s sole risk and expense. Philips shall not be liable for any lost profits or lost savings, indirect, incidental, punitive, special, or consequential damages whether or not such damages are based on tort, warranty, contract, or any other legal theory – even if Philips has been advised, or is aware, of the possibility of such damages.

The OEM must bring any claim for damages within ninety (90) days of the day of the event giving rise to any such claim, and all lawsuits relative to any such claim.

WEEE Statement

EN Please inform yourself about the local waste disposal, separation and collection system for electrical and electronic products and packaging. Please act according to your local rules and do not dispose your old product and packaging with your normal household waste. The correct disposal of the packaging, your product and/or batteries will help prevent potential negative consequences for the environment and human health. Batteries should be disposed separately from the municipal waste stream via designated collection facilities. When disposing a product that contains non-user replaceable batteries, the non-user replaceable batteries shall be removed by a professional.

DE Bitte erkundige Dich nach dem örtlichen Entsorgungs-, Trenn- und Sammelsystem für elektrische und elektronische Produkte und Verpackungen. Richte Dich bitte nach den geltenden Vorschriften in Deinem Land und entsorge Deine Altgeräte nicht über Deinen Haushaltsabfall. Durch die korrekte Entsorgung der Verpackung, Deines Produkts und/oder der Batterien/Akkus werden Umwelt und Menschen vor möglichen negativen Folgen geschützt. Batterien/Akkus müssen separat vom städtischen Abfallsystem über dafür vorgesehene Sammelstellen entsorgt werden. Bei der Entsorgung eines Produkts, das nicht vom Benutzer austauschbare Batterien/Akkus enthält, sollten die nicht vom Benutzer austauschbaren Batterien/Akkus von einer fachkundigen Person entfernt werden. Weitere Informationen über die Entsorgung Ihres Produktes und der Batterien finden Sie unter www.signify.com/de-de/sustainability.

FR Veuillez vous informer sur le système de collecte local, et sur la procédure de tri et de collecte des produits électriques et électroniques, et des emballages. Veuillez vous conformer aux consignes locales, et ne jetez pas votre ancien produit et son emballage avec les ordures ménagères. En respectant ces consignes pour mettre au rebut l'emballage, le produit et/ou les piles, vous contribuez à respecter l'environnement et la santé des personnes. Les piles ne doivent pas être mêlées aux ordures ordinaires, mais jetées sur des sites séparés prévus à cet effet. Lorsque vous mettez au rebut un produit contenant des piles non remplaçables, celles-ci doivent être retirées par un professionnel.

NL Houd rekening met het lokale systeem voor afvalscheiding en -inzameling wanneer u elektrische en elektronische producten of verpakkingen weggooit. Neem de lokale regelgeving in acht en gooi je oude producten en verpakkingen niet weg met het normale huishoudelijke afval. Het correct wegwerpen van de verpakking, het product en/of batterijen helpt mogelijke negatieve gevolgen voor het milieu en de menselijke gezondheid te voorkomen. Batterijen moeten gescheiden van huishoudelijke afvalstromen worden ingeleverd bij speciale inzamelpunten. Wanneer je een product weggooit met batterijen die niet door de gebruiker kunnen worden vervangen, moeten die batterijen door een professional worden verwijderd.

ES IInfórmese sobre el sistema local de eliminación, separación y recogida de residuos de productos y envases eléctricos y electrónicos. Actúe de acuerdo con las normas locales y no tire el producto antiguo y su embalaje a la basura doméstica normal. La eliminación correcta del embalaje, de su producto y/o de las pilas contribuirá a evitar posibles consecuencias negativas para el medio ambiente y la salud humana. Las pilas deben eliminarse por separado del flujo de residuos municipales en las instalaciones de recogida designadas. Cuando deseche un producto que contenga pilas no sustituibles por el usuario, un profesional deberá retirar las pilas no sustituibles por el usuario.

PT Informe-se sobre o sistema local de eliminação, separação e recolha de resíduos de embalagens e produtos elétricos e eletrónicos. Proceda em conformidade com as regras locais e não elimine a produto antigo e a respetiva embalagem juntamente com os resíduos domésticos normais. A eliminação correta da embalagem, do seu produto e/ou das pilhas ajudará a prevenir potenciais consequências negativas para o ambiente e para a saúde humana. As pilhas devem ser eliminadas em separado do fluxo de resíduos urbanos através das instalações de recolha designadas. Quando se elimina um produto que contém pilhas não substituíveis pelo utilizador, estas devem ser removidas por um profissional.

IT Si prega di informarsi sul sistema locale di smaltimento, separazione e raccolta dei rifiuti per prodotti elettrici ed elettronici e imballaggi. Si prega di agire secondo le regole locali e di non smaltire il vecchio prodotto e l'imballaggio con i normali rifiuti domestici. Il corretto smaltimento dell'imballaggio, del prodotto e/o delle batterie aiuterà a prevenire potenziali conseguenze negative per l'ambiente e la salute umana. Le batterie dovrebbero essere smaltite separatamente dal flusso di rifiuti urbani tramite strutture di raccolta designate. Quando si smaltisce un prodotto che contiene batterie non sostituibili dall'utente, le batterie non sostituibili dall'utente devono essere rimosse da un professionista.

DA Hold dig orienteret om den lokale affaldsordning, -sortering og -indsamling for elektriske og elektroniske produkter og emballage. Følg de lokale regler, og bortskaf ikke dine udtjente produkter og emballage sammen med almindeligt husholdningsaffald. Korrekt bortskaffelse af emballagen, produktet og/eller batterier er med til at forhindre negative konsekvenser for miljøet og menneskers sundhed. Batterier skal bortskaffes separat fra den kommunale affaldsstrøm via særskilte indsamlingsordninger. Ved bortskaffelse af et produkt, der indeholder batterier, der ikke kan udskiftes af brugeren, skal batterierne fjernes af en fagperson.

FI Ota selvää paikallisesta sähkö- ja elektroniikkatuotteiden sekä pakkausten hävitys-, erottelu- ja keräysjärjestelmästä. Noudata paikallisia määräyksiä, äläkä hävitä vanhoja tuotteita ja pakkauksia tavallisen kotitalousjätteen mukana. Pakkauksen, tuotteen ja/tai paristojen asianmukainen hävittäminen auttaa ehkäisemään mahdollisia haittoja ympäristölle ja ihmisten terveydelle. Paristot on hävitettävä yhdyskuntajätteestä erillään määritettyjen keräyspisteiden kautta. Muita kuin käyttäjän vaihdettavissa olevia paristoja sisältäviä tuotteita hävitettäessä muiden kuin käyttäjän vaihdettavissa olevien paristojen poistaminen on jätettävä ammattilaisen tehtäväksi.

SV Se till att skaffa dig kunskap om de lokala systemen för bortskaffande, sortering och insamling av avfall gällande elektriska och elektroniska produkter och förpackningar. Agera i enlighet med lokala regler och släng inte bort din gamla produkt och förpackning tillsammans med vanligt hushållsavfall. Korrekt bortskaffande av förpackningen, din produkt och/eller batterier hjälper till att förebygga potentiella negativa konsekvenser för miljön och för människors hälsa. Batterier ska slängas separat från det kommunala avfallsflödet via särskilda insamlingsanläggningar. När du slänger en produkt som innehåller batterier som inte kan bytas ut av användaren ska de batterier som inte kan bytas ut av användaren avlägsnas av en yrkesperson.

NO Vennligst informer deg selv om det lokale avfallshåndterings-, separerings- og innsamlingssystemet for elektriske og elektroniske produkter og emballasje. Opptre i henhold til lokale regler og ikke kast det gamle produktet og emballasjen sammen med vanlig husholdningsavfall. Riktig avhending av emballasjen, produktet og/eller batteriene vil bidra til å forhindre potensielle skadelige følger for miljøet og personers helse. Batterier bør avhendes separat fra kommunalt avfall via anviste innsamlingssteder. Ved kassering av et produkt som inneholder batterier som ikke kan skiftes ut av brukeren, skal batteriene som ikke kan byttes av bruker fjernes av en fagperson.

EL Ενημερωθείτε για το τοπικό σύστημα διάθεσης, διαχωρισμού και συλλογής αποβλήτων για ηλεκτρικά και ηλεκτρονικά προϊόντα και συσκευασίες. Ενεργείτε σύμφωνα με τους τοπικούς σας κανόνες και μην απορρίπτετε το παλιό σας προϊόν και τη συσκευασία του μαζί με τα συνήθη οικιακά απορρίμματα. Η σωστή απόρριψη της συσκευασίας, του προϊόντος σας ή/και των μπαταριών θα συμβάλει στην αποφυγή πιθανών αρνητικών συνεπειών για το περιβάλλον και την ανθρώπινη υγεία. Οι μπαταρίες θα πρέπει να απορρίπτονται χωριστά από το ρεύμα των αστικών απορριμμάτων μέσω των καθορισμένων εγκαταστάσεων συλλογής. Κατά την απόρριψη ενός προϊόντος που περιέχει μπαταρίες που δεν αντικαθίστανται από τον χρήστη, αυτές πρέπει να αφαιρούνται από επαγγελματία.

TR Lütfen elektrikli ve elektronik ürünler ve ambalajları için yerel atık atma, ayırma ve toplama sistemleri hakkında bilgi edinin. Lütfen bulunduğunuz bölgedeki yerel kurallara uygun hareket edin ve eski ürün ve ambalajınızı normal ev atıklarınızla birlikte atmayın. Ambalajın, ürününüzün ve/veya pillerin doğru şekilde atılması çevre ve insan sağlığı için olası olumsuz sonuçların önlenmesine yardımcı olur. Pillerin özel toplama tesisleri aracılığıyla belediye atık kolundan ayrı bir şekilde atılması gerekir. Kullanıcı tarafından değiştirilemeyen pil bulunan bir ürünü atarken pilin bir profesyonel tarafından çıkarılması gerekir.

BG Моля, запознайте се с местната система за изхвърляне, разделяне и събиране на отпадъци от електрически и електронни продукти и опаковки. Моля, действайте в съответствие с местните правила и не изхвърляйте стария продукт и опаковката заедно с обикновените битови отпадъци. Правилното изхвърляне на опаковката, на Вашия продукт и/или батерии ще помогне да се предотвратят потенциални негативни последици за околната среда и човешкото здраве. Батериите трябва да се изхвърлят отделно от потока на битовите отпадъци чрез определените за целта събирателни пунктове. При изхвърляне на продукт, който съдържа батерии, които не могат да се заменят от потребителя, същите трябва да бъдат отстранени от специалист.

HU Érdeklődjön az elhasznált elektromos és elektronikus termékek és csomagolásuk helyi szelektív gyűjtéséről és ártalmatlanításáról. Kövesse a helyi szabályozást, és ne helyezze az elhasználódott terméket háztartásihulladék-gyűjtőbe. A csomagolás, valamint az elhasználódott termék és/vagy akkumulátorok megfelelő ártalmatlanítása segít megelőzni a környezet és emberi egészség károsodását. Az akkumulátorokat külön, a helyi önkormányzat által megjelölt helyen kell gyűjteni, és nem szabad a háztartási hulladék közé keverni őket. A nem cserélhető akkumulátorokat tartalmazó termékek ártalmatlanításakor a nem cserélhető akkumulátorokat szakembernek kell eltávolítania.

SL Seznanite se z lokalnim sistemom odstranjevanja, ločevanja in zbiranja električne in elektronske opreme ter embalaže. Upoštevajte lokalno zakonodajo ter starega izdelka in embalaže ne odložite med običajne gospodinjske odpadke. S pravilnim odlaganjem embalaže, izdelka in/ali baterij med odpadke boste preprečili morebitne negativne posledice na okolje in zdravje ljudi. Baterij ne smete odložiti med gospodinjske odpadke, temveč na namenskih zbirnih mestih. Če odlagate izdelek, ki vsebuje baterije, ki jih uporabnik ne more zamenjati sam, bo takšne baterije odstranila strokovna oseba.

HR Informirajte se o lokalnom sustavu za odlaganje, odvajanje i prikupljanje električnih i elektroničkih proizvoda i ambalaža. Postupajte u skladu s lokalnim propisima i ne odlažite stare proizvode i ambalaže s uobičajenim kućanskim otpadom. Ispravno odlaganje ambalaže, proizvoda i/ili baterija pomoći će u sprječavanju mogućih negativnih posljedica za okoliš i zdravlje ljudi. Baterije je potrebno odlagati odvojeno od komunalnog otpada na za to predviđenim odlagalištima. Kada odlažete proizvod koji sadrži baterije koje korisnik ne može samostalno zamijeniti, te će baterije ukloniti stručnjak.

MK Информирајте се за локалниот систем за фрлање, одделување и собирање отпад од електрични и електронски производи и пакувања. Постапувајте во согласност со вашите локални прописи и немојте да ги фрлате стариот производ и пакувањето во обичниот отпад од домаќинството. Правилното фрлање на пакувањето, производот и/ли батериите ќе помогне да се спречат потенцијалните негативни последици за животната средина и човечкото здравје. Батериите треба да се фрлаат одделно од општинскиот систем за отпад преку назначени собирни објекти. Кога фрлате некој производ што содржи батерии што не може да се заменат, тие ќе се отстрануваат од страна на стручно лице.

SR Informišete se o lokalnom sistemu za odlaganje, odvajanje i sakupljanje otpada za električne i elektronske proizvode i ambalažu. Postupajte u skladu sa lokalnim pravilima i ne odlažite svoj stari proizvod i ambalažu sa uobičajenim kućnim otpadom. Pravilno odlaganje ambalaže, proizvoda i/ili baterija će pomoći u sprečavanju potencijalnih negativnih posledica po životnu sredinu i zdravlje ljudi. Baterije treba odlagati odvojeno od toka komunalnog otpada putem određenih objekata za prikupljanje. Kada odlažete proizvod koji sadrži baterije koje ne može zameniti korisnik, te baterije će ukloniti profesionalac.

CZ Informujte se o místním systému likvidace a tříděného sběru elektrických a elektronických výrobků a balení. Postupujte v souladu s místními předpisy a nevyhazujte staré výrobky do běžného komunálního odpadu. Správná likvidace produktů a baterií přispívá k ochraně případných nežádoucích vlivů na životní prostředí a zdraví osob. Baterie je třeba zlikvidovat samostatně mimo veřejné skládky prostřednictvím specializovaných sběrných míst. Při likvidaci výrobku obsahujícího baterie, které nejsou uživatelsky vyměnitelné, musí uživatelsky nevyměnitelné baterie vyjmout odborník.

SK Zistite si informácie o miestnej likvidácii odpadu, systéme separovaného zberu elektrických a elektronických výrobkov a obalov. Postupujte v súlade s miestnymi predpismi a nevyhadzujte staré výrobky do bežného komunálneho odpadu. Správna likvidácia produktov a batérií prispieva k zabráneniu prípadným nežiaducim vplyvom na životné prostredie a zdravie osôb. Batérie treba zlikvidovať samostatne mimo verejnej skládky prostredníctvom špecializovaných zberných miest. Pri likvidácii výrobku obsahujúceho batérie, ktoré nemôže vyberať používateľ, musí výber nevymeniteľných batérií vykonať odborný technik.

PL Należy we własnym zakresie sprawdzić informacje o lokalnych placówkach odbierających zużyte produkty elektryczne i elektroniczne oraz opakowania po nich. Należy bezwzględnie przestrzegać lokalnych przepisów zakazujących wyrzucania urządzeń i opakowań razem z odpadami komunalnymi. Właściwe usunięcie zużytego opakowania, produktu i/lub baterii pomoże uniknąć potencjalnych szkodliwych skutków dla środowiska naturalnego i zdrowia ludzi. Baterii nie wolno wyrzucać wraz z odpadami komunalnymi. Należy je zanosić do wyznaczonych punktów zbiórki. W przypadku utylizacji produktu zawierającego baterie niepodlegające wymianie przez użytkownika, powinny one zostać usunięte przez specjalistę.

RO Informați-vă cu privire la sistemul local de colectare, separare și eliminare a deșeurilor pentru produsele electrice și electronice și ambalajele acestora. Acționați în conformitate cu regulile locale și nu eliminați produsele vechi și ambalajele împreună cu deșeurile menajere obișnuite. Eliminarea corespunzătoare a ambalajelor, a produsului și/sau a bateriilor va ajuta la prevenirea consecințelor potențiale negative pentru mediu și sănătatea umană. Bateriile trebuie eliminate separat de sistemul municipal de gestionare a deșeurilor prin intermediul unităților de colectare desemnate. Atunci când eliminați un produs care conține baterii ce nu pot fi înlocuite de utilizator, aceste baterii trebuie îndepărtate de către un specialist.

SQ Informohuni për sistemin lokal të hedhjes së mbeturinave, ndarjes dhe grumbullimit për produktet elektrike dhe elektronike dhe paketimin. Veproni në përputhje me rregullat lokale dhe mos e hidhni produktin e vjetër dhe paketimin me mbeturinat e zakonshme të shtëpisë. Hedhja e duhur e paketimit, produktit dhe/ose baterive do të ndihmojë në parandalimin e pasojave të mundshme negative për mjedisin dhe shëndetin njerëzor. Bateritë duhet të hidhen veçmas nga rryma e mbeturinave urbane nëpërmjet pikave të autorizuara të grumbullimit. Kur hidhni një produkt që përmban bateri që nuk ndërrohen nga përdoruesi, këto bateri duhet të hiqen nga një profesionist.

LV Lūdzu, iepazīstieties ar informāciju par vietējo atkritumu likvidēšanas, nošķiršanas un savākšanas sistēmu elektriskām un elektroniskām precēm un iepakojumiem. Rīkojieties atbilstoši vietējiem noteikumiem un nelikvidējiet nolietotos izstrādājumus un iepakojumus kopā ar parastajiem sadzīves atkritumiem. Izstrādājuma un/vai bateriju pareiza likvidēšana palīdzēs novērst iespējamu nelabvēlīgu ietekmi uz vidi un cilvēku veselību. Baterijas jālikvidē atsevišķi no pašvaldību atkritumu plūsmas ar šim nolūkam īpaši paredzētu savākšanas uzņēmumu starpniecību. Likvidējot produktu, kas satur baterijas, kuras lietotājs nevar nomainīt, profesionālim ir jāizņem šīs baterijas.

LT Susipažinkite su vietine elektros ir elektroninių gaminių bei pakuočių atliekų šalinimo, rūšiavimo ir surinkimo sistema. Laikykitės vietinių taisyklių ir neišmeskite seno gaminio bei pakuotės kartu su įprastomis buitinėmis atliekomis. Tinkamas pakuotės, gaminio ir (arba) baterijų išmetimas padės išvengti galimų neigiamų pasekmių aplinkai ir žmonių sveikatai. Baterijos turi būti išmestos atskirai nuo komunalinių atliekų srauto tam skirtais surinkimo įrenginiais. Išmetant gaminį, kuriame yra naudotojo nekeičiamų baterijų, naudotojų nekeičiamas baterijas turi išimti profesionalas.

ET Viige ennast kurssi kohaliku elektri- ja elektroonikatoodete ning pakendite kasutusest kõrvaldamise, sorteerimise ja kogumise süsteemiga. Järgige kohalikke eeskirju järgi ning ärge visake vana toodet ega pakendeid olmejäätmete hulka. Pakendi ja vana toote ja/või akude nõuetekohane kasutusest kõrvaldamine aitab vältida võimalikku negatiivset mõju keskkonnale ja inimeste tervisele. Akud tuleb kasutusest kõrvaldada olmejäätmetest eraldi ning viia selleks ette nähtud kogumiskohta. Kui kõrvaldate kasutusest toote, mis sisaldab akusid, mida kasutaja ei saa vahetada, peab need akud tootest eemaldama kvalifitseeritud spetsialist.

RU С информацией о местных системах раздельного сбора и утилизации таких отходов, как электрическое и электронное оборудование, а также упаковка, рекомендуется ознакомиться самостоятельно. Соблюдайте региональные нормативные требования и не выбрасывайте отслужившее изделие вместе с обычным бытовым мусором. Правильная утилизация отслужившего изделия и/или батарей поможет уменьшить негативные последствия для окружающей среды и здоровья людей. Батареи следует утилизировать отдельно от бытовых отходов через специальные пункты сбора. Если изделие оснащено батареями, не предназначенными для самостоятельной замены, их должен извлечь специалист.

UA Рекомендуємо самостійно ознайомитися з інформацією про місцеві системи сортування й утилізації відходів електричного та електронного обладнання і їхнього пакування. Дійте відповідно до місцевих правил і не викидайте старий виріб і його упаковку разом зі звичайними побутовими відходами. Правильна утилізація упаковки, виробу та/або акумуляторів допоможе запобігти потенційним негативним наслідкам для довкілля та здоров'я людей. Акумулятори слід утилізувати окремо від потоку комунальних відходів через спеціальні місця для збору. Під час утилізації виробу, що містить акумулятор, який не може замінювати користувач, такий акумулятор має вилучати професіонал.
УВАГА: Нижче ви знайдете все пояснення з числовими посиланнями на значки, відповідно, перед цими інструкціями з безпеки:



© 2024 Signify Holding, IBRS 10461, 5600VB, NL. All rights reserved.

The information provided herein is subject to change, without notice. Signify does not give any representation or warranty as to the accuracy or completeness of the information included herein and shall not be liable for any action in reliance thereon. The information presented in this document is not intended as any commercial offer and does not form part of any quotation or contract, unless otherwise agreed by Signify.
Philips and the Philips Shield Emblem are registered trademarks of Koninklijke Philips N.V. All other trademarks are owned by Signify Holding or their respective owners.

18 November 2025
Data subject to change

www.philips.com/Technology