PHILIPS

**DN068B G2 LED15/865 PSU D175**

911401863587



# SmartBright Pro Downlight gen2, 14 W, 1500 lm, 6500 K, Beam angle 110°, Textured, IP20(IP44 front)

The SmartBright Pro Downlight comes offering reliable lighting performance with recessed installation, suitable for diversified applications. Full cut out size from D75 to D200, full CCT range covering 3000K, 4000K and 6500K, lumen output covers 400lm to 2000lm, eye comfort experience with low flicker lighting can attract you more with its elegant design.

## General Information

| | |
|---|---|
| Number of gear units | 1 unit |
| Gear | EB [Electronic] |
| Driver included | Yes |
| Light source engine type | LED |
| Value ladder | Value |
| Warranty period | 3 years |

## Light Technical

| | |
|---|---|
| Luminous Flux | 1,500 lm |
| Correlated Color Temperature (Nom) | 6500 K |
| Luminous Efficacy (rated) (Nom) | 110 lm/W |
| Color rendering index (CRI) | 80 |

| | |
|---|---|
| Number of light sources | 1 |
| Beam angle of light source | 110 degree(s) |
| Light source color | 865 cool daylight |
| Optic type | Beam angle 110° |
| Luminaire light beam spread | 110° |
| Unified glare rating CEN | 32 |

## Operating and Electrical

| | |
|---|---|
| Input Voltage | 220 to 240 V |
| Line Frequency | 50 or 60 Hz |
| Power Consumption | 14 W |
| Power Factor (Fraction) | 0.9 |
| Connection | Flying leads/wires |
| Cable | 2×0.75mm² |
| Number of products on MCB of 16 A type B | - |
| Suitable for random switching | No |
| Protection class IEC | Safety class II |

## Controls and Dimming

| | |
|---|---|
| Dimmable | - |
| Control interface | - |
| Maximum dim level | Not applicable |

## Mechanical and Housing

| | |
|---|---|
| Housing Material | Polycarbonate |
| Reflector material | - |
| Optic material | Polycarbonate |
| Optical cover material | Polycarbonate |
| Housing Color | White |
| Mounting device | Recessed mounting box round |
| Optical cover finish | Textured |
| Overall height | 35 mm |
| Overall diameter | 195 mm |
| Ingress protection code | IP20(IP44 front) |
| Mech. impact protection code | IK03 [0.3 J] |
| Optical cover type | Polycarbonate micro lens optic |
| Net Weight (Piece) | 0.130 kg |

## Approval and Application

| | |
|---|---|
| Glow-wire test | Temperature 650 °C, duration 30 s |
| Flammability mark | For mounting on normally flammable surfaces |
| CE mark | No |
| ENEC mark | - |
| Photobiological risk | Photobiological risk group 0 @ 200mm to EN62471 |
| Photobiological risk specification | 0.2 m |
| EU RoHS compliant | Yes |
| Performance ambient temperature Tq | 25 °C |
| Ambient temperature range | -20 to +40 °C |

## Initial Performance (IEC Compliant)

| | |
|---|---|
| Luminous flux tolerance | +/-10% |
| Initial chromaticity | (0.31, 0.34) SDCM≤6 |
| Power consumption tolerance | +/-10% |

## Product Data

| | |
|---|---|
| Order product name | DN068B G2 LED15/865 PSU D175 |
| Full product name | DN068B G2 LED15/865 PSU D175 |
| Full product code | 872110330237399 |
| Order code | 911401863587 |
| Material Nr. (12NC) | 911401863587 |
| Numerator - Quantity Per Pack | 1 |
| EAN/UPC - Product/Case | 8721103302373 |
| Numerator - Packs per outer box | 20 |
| EAN/UPC - Case | 8721103302649 |

## Dimensional drawing

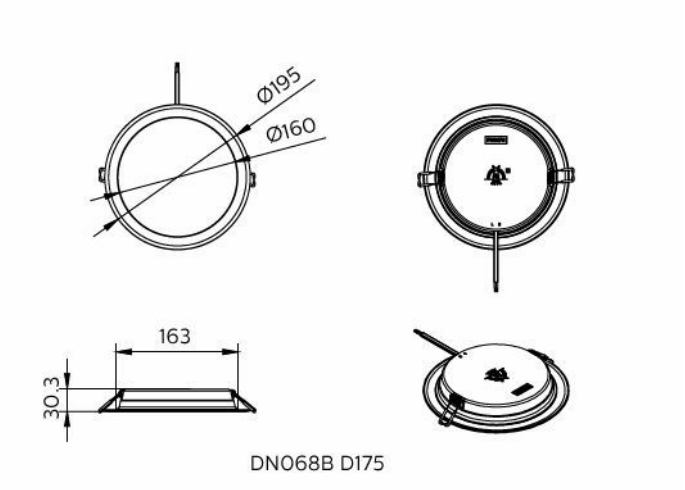


## Related Documents

| Documents and certificates | Document Name | Download |
|---|---|---|
| Installation Instructions | DN068-G2-MI.pdf | Download |

| Photometry and lighting design | Document Name | Download |
|---|---|---|
| IES File | DN068B-G2-LED15-PSU-D175.ies | Download |

© 2026 Signify Holding. All rights reserved. The information provided herein is subject to change, without notice. Signify does not give any representation or warranty as to the accuracy or completeness of the information included herein and shall not be liable for any action in reliance thereon. The information presented in this document is not intended as any commercial offer and does not form part of any quotation or contract, unless otherwise agreed by Signify. Philips and the Philips Shield Emblem are registered trademarks of Koninklijke Philips N.V.