PHILIPS

BY240P 200W_100W/ 840_850/WB G2

911401812887



SmartBright Lumen & Colour Select Highbay, 200 W, 150 W, 100 W, 28000 lm, 22000 lm, 15000 lm, Selectable, 93°

The SmartBright Lumen and Colour Selectable Highbay delivers unparalleled flexibility for a wide range of applications. Colour selectable (4000K/4500K/5000K) and lumen selectable from 15K to 28K lumens in the one handy package makes this the only highbay you need for almost any application. An optional motion sensor adds strong energy saving credentials.

General Information

Number of gear units	1 unit
Gear	-
Driver included	Yes
Light source engine type	LED
Value ladder	Value
Warranty period	5 years

Light Technical

Luminous Flux	28,000 lm
Correlated Color Temperature (Nom)	Selectable
Luminous Efficacy (rated) (Nom)	140 lm/W
Color rendering index (CRI)	80
Beam angle of light source	92 degree(s)
Light source color	Multi Color Temperature
Optic type	Wide beam
Luminaire light beam spread	93°
Unified glare rating CEN	31
Effective projected area	0.102 m^2

Operating and Electrical

Input Voltage	220 to 240 V
Line Frequency	50 to 60 Hz
Inrush current	68 A
Inrush time	0.213 ms

Power Consumption	200 W
Power Factor (Fraction)	0.9
Connection	-
Cable	Cable with plug
Number of products on MCB of 16 A type B	6
Suitable for random switching	Not applicable
Protection class IEC	Safety class I

Controls and Dimming

Dimmable	-
Control interface	-
Maximum dim level	Not applicable

Mechanical and Housing

Housing Material	Aluminum die cast
Reflector material	Polycarbonate
Optic material	Polycarbonate
Optical cover material	Polycarbonate
Housing Color	Black
Mounting device	Suspension set simple, standard
Optical cover finish	Opal
Overall height	119 mm
Overall diameter	320 mm
Ingress protection code	IP65 [Dust penetration-protected, jet-proof]
Mech. impact protection code	IK07 [2 J reinforced]
Optical cover type	Lens
Net Weight (Piece)	2.460 kg

Approval and Application

Glow-wire test	Temperature 650 °C, duration 30 s
Flammability mark	For mounting on normally flammable surfaces
CE mark	No
ENEC mark	-
Photobiological risk	Photobiological risk group 1 @ 200mm to EN62471
Photobiological risk specification	0.2 m
EU RoHS compliant	Yes
Performance ambient temperature Tq	25 °C
Ambient temperature range	-30 to +50 °C

Initial Performance (IEC Compliant)

Luminous flux tolerance	-10% / +10%
Initial chromaticity	(0.38, 0.38) SDCM≤5
Power consumption tolerance	+/-10%

Product Data

Order product name	BY240P 200W_100W/840_850/WB G2
Full product name	BY240P 200W_100W/840_850/WB G2
Full product code	872016975378500
Order code	911401812887
Material Nr. (12NC)	911401812887
Numerator - Quantity Per Pack	1
EAN/UPC - Product/Case	8720169753785
Numerator - Packs per outer box	1
EAN/UPC - Case	8720169753785

Dimensional drawing

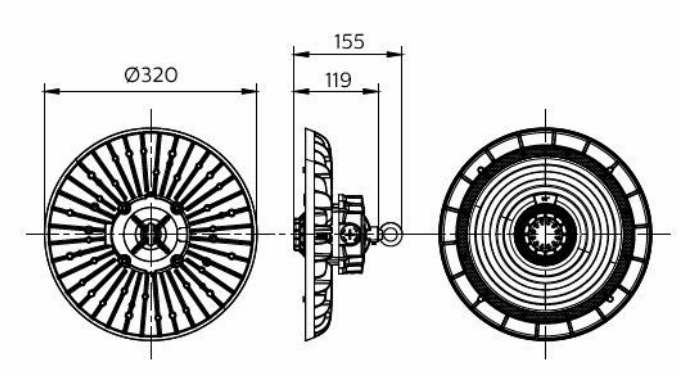

Related Documents

Documents and certificates	Document Name	Download
Installation Instructions	BY240P-G2-Highbay-INI.pdf	Download

Photometry and lighting design	Document Name	Download
IES File	BY240P-G2-Photometry-IES.zip	Download

© 2026 Signify Holding. All rights reserved. The information provided herein is subject to change, without notice. Signify does not give any representation or warranty as to the accuracy or completeness of the information included herein and shall not be liable for any action in reliance thereon. The information presented in this document is not intended as any commercial offer and does not form part of any quotation or contract, unless otherwise agreed by Signify. Philips and the Philips Shield Emblem are registered trademarks of Koninklijke Philips N.V.