PHILIPS

Actinic BL PL-L Secura

XUVAPLL



Actinic BL PL-L Secura - compact and HACCP-approved

With an optimized spectrum matching the eye sensitivity of the housefly, Actinic BL PL-L Secura lamps are perfect for attracting insects. With the compact PL-L product format in a variety of wattages, new attactive designs are possible. Furthermore, these lamps have virtually no UV-B output, and so are perfectly safe. In addition, they have a special "Secura" sleeve that keeps all glass and components together in the case of accidental breakage. This eliminates the risk of glass splinters showering down on food preparation areas, for example. And that is why it meets the strict HACCP requirements. What's more, with the lowest mercury content in the industry and being 100% lead-free, these lamps represent a very good environmental choice.

Benefits

- Perfectly matches the eye sensitivity of houseflies and in this way attracts more insects
- Safe for use
- Good environmental choice
- Other designs possible
- No risk of glass particles

Applications

- Insect traps, Electronic Fly Killers (EFKs)

Features

- Emits long-wave UV-A radiation in the 350-400 nm range
- UV-B/UV-A ratio less than 0.1% (UV-B 280-315 nm)
- 100% lead-free
- Low mercury content
- Compact lamp format
- Shatterproof sleeve
- A lamp breaking is extremely unlikely to have any impact on your health. If a lamp breaks, ventilate the room for 30 minutes and remove the parts, preferably with gloves. Put them in a sealed plastic bag and take it to your local waste facilities for recycling. Do not use a vacuum cleaner.

Versions



XPPR XURPLL 0002

Dimensional drawing

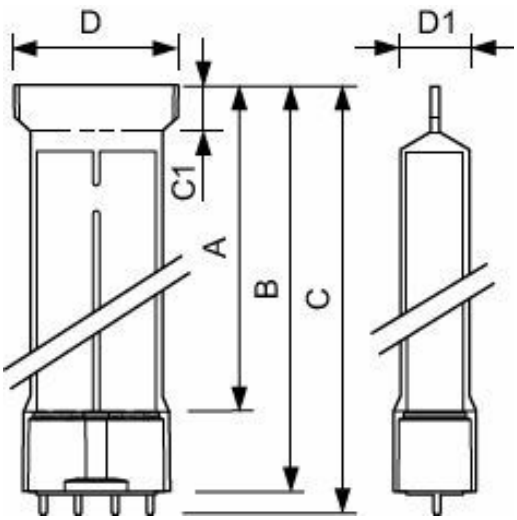

Product	D1 (max)	D (max)	C1	A (max)	B (max)	C (max)
PL-L 36W/10/4P SECURA 1CT/25	27 mm	40 mm	20.0 mm	404.2 mm	430.0 mm	436.6 mm

General Information

Cap-Base	2G11

Light Technical

Color Code	10

Operating and Electrical

Power Consumption	36 W
Lamp Current (Nom)	0.440 A

Mechanical and Housing

Bulb Shape	2xT16

Approval and Application

Mercury (Hg) Content (Max)	2.0 mg
Mercury (Hg) Content (Nom)	2

© 2026 Signify Holding. All rights reserved. The information provided herein is subject to change, without notice. Signify does not give any representation or warranty as to the accuracy or completeness of the information included herein and shall not be liable for any action in reliance thereon. The information presented in this document is not intended as any commercial offer and does not form part of any quotation or contract, unless otherwise agreed by Signify. Philips and the Philips Shield Emblem are registered trademarks of Koninklijke Philips N.V.