PHILIPS

BN126C LED22S/840 PSU L600

911401898780



Service tag

Coreline Slim Batten, 17 W, 2200 lm, 4000 K

The new Philips Coreline slim batten offers exceptional value. It is Perfect for your everyday lighting installations. Available in 3 standard sizes, and 2 CCTs to provide flexibility to customer.

General Information

Light source engine type	LED
Service tag	Yes

Light Technical

Luminous Flux	2,200 lm
Correlated Color Temperature (Nom)	4000 K
Luminous Efficacy (rated) (Nom)	105 lm/W
Color rendering index (CRI)	>80
Light source color	840 neutral white

Operating and Electrical

Input Voltage	220 to 240 V
Line Frequency	50 or 60 Hz
Power Consumption	17 W
Power Factor (Fraction)	0.9
Number of products on MCB of 16 A type B	80
Protection class IEC	Safety class I

Controls and Dimming

Dimmable	No
Control interface	-

Mechanical and Housing

Housing Material	Steel
Optical cover material	Polycarbonate
Housing Color	White RAL 9003
Optical cover finish	Opal
Overall length	600 mm
Overall width	65 mm
Overall height	65 mm
Dimensions (Height x Width x Depth)	65 x 65 x 600 mm
Ingress protection code	IP20/40 [Finger-protected;Wire-protected]
Mech. impact protection code	IK04 [0.5 J standard plus]
Optical cover type	Polycarbonate Diffuser
Net Weight (Piece)	0.520 kg

Approval and Application

CE mark	Yes
Ambient temperature range	-20 to +40 °C

Dimensional drawing

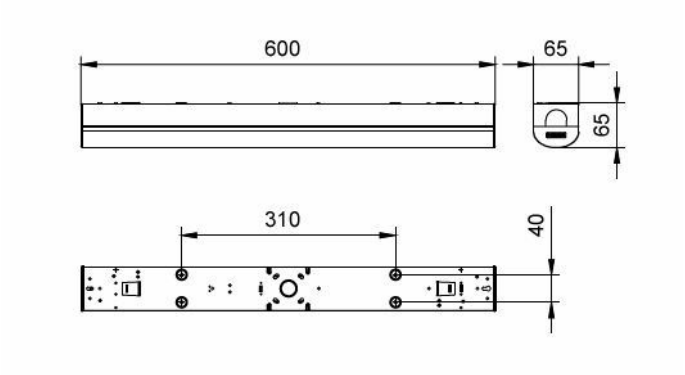

Initial Performance (IEC Compliant)

Luminous flux tolerance	+/-10%
Power consumption tolerance	+/-10%

Product Data

Order product name	BN126C LED22S/840 PSU L600
Full product name	BN126C LED22S/840 PSU L600
Full product code	692382863851199
Order code	911401898780
Material Nr. (12NC)	911401898780
Numerator - Quantity Per Pack	1
EAN/UPC - Product/Case	6923828638511
Numerator - Packs per outer box	8
EAN/UPC - Case	6923828638573

Related Documents

Documents and certificates	Document Name	Download
Installation Instructions	BN126C-MI.pdf	Download

Photometry and lighting design	Document Name	Download
IES File	BN126C LED22S 840 PSU L600_IESNA2002.ies	Download

© 2026 Signify Holding. All rights reserved. The information provided herein is subject to change, without notice. Signify does not give any representation or warranty as to the accuracy or completeness of the information included herein and shall not be liable for any action in reliance thereon. The information presented in this document is not intended as any commercial offer and does not form part of any quotation or contract, unless otherwise agreed by Signify. Philips and the Philips Shield Emblem are registered trademarks of Koninklijke Philips N.V.