PHILIPS

Halogen reflector

XHOPP



Halogen reflector lamps – proven reliability

Philips' halogen reflector lamps offer the ideal no-fuss solution for a wide variety of medical, projection and scientific illumination systems. Their proven reliability makes them ideal for retrofit installations. The burners are precisely aligned for optimal light performance. Dichroic reflectors ensure heat dissipation towards the back of the optical system, which helps the optical system remain within temperature limits. A special blue-filter version blocking out unwanted light above 700 nm is available for dental curing applications. In addition, you get all the proven advantages of halogen technology such as a CRI of 100 – the same as natural sunlight for the best possible color rendering. Halogen lamps also create a comfortable warm white light, and they maintain their high lumen output with almost no lumen reduction throughout their lifetime.

Benefits

- Optimal light performance
- Remains within temperature limits
- No re-alignment necessary when lamp is replaced

Applications

- Medical endoscopy
- Industrial endoscopy
- Fiber optic illumination

Data subject to change

- Dental curing
- Projection systems
- Microfiche
- Spectrography

Features

- Excellent distortion-free quartz bulb
- Dichroic coating ensures dissipation of approximately 75% of the generated heat backwards

Versions



XPPR XHOPDI 0001



XPPR XHOPDI 0002



XPPR XHOPDI 0005



XPPR_XHOPDI_0007-Product photo



Halogen spot

Dimensional drawing

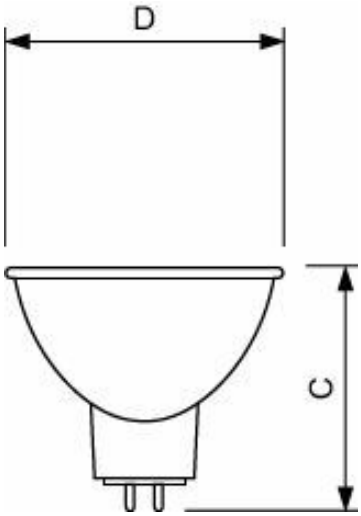

Product	D (max)	C (max)
13163 250W GX5.3 24V 1CT/10X5F	50 mm	44.5 mm
13164 200W GX5.3 24V 1CT/24	50.7 mm	44.5 mm
13186 90W GX5.3 14.5V 1CT/24	50 mm	45 mm
13289 50W GX5.3 13.8V 1CT/24	50 mm	46 mm
13629 150W GX5.3 21V 1CT/24	50.7 mm	44.5 mm
13938XHP 50W GX5.3 22.8V 1CT/24	50 mm	45 mm
5995 EJM 150W GX5.3 21V 1CT/24	50.7 mm	44.5 mm
6423 150W GZ6.35 15V 1CT/10X5F	50 mm	42 mm
6423FO 150W GZ6.35 15V 1CT/10X5F	50 mm	42 mm
6834 100W GZ6.35 12V	50 mm	42 mm
6834FO 100W GZ6.35 12V 1CT/10X5F	50 mm	42 mm
DDL 150W 20V 24PK	50.7 mm	44.5 mm
JCR 15V 150W H5 24 PACK	50 mm	43 mm

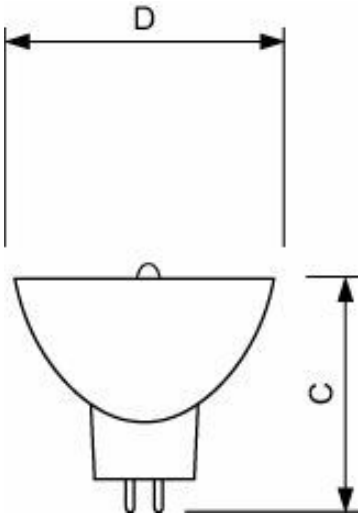

Product	D (max)	C (max)
13528 15W GZ4 6V 1CT/24	35 mm	42 mm

Light Technical

Luminous Flux	840 lm
Color rendering index (CRI)	100

Controls and Dimming

Dimmable	Yes

Mechanical and Housing

Bulb Material	Quartz-UV Open

General Information

Order Code	Full Product Name	Cap-Base	Operating Position
923921419794	DDL 150W 20V 24PK	GX5.3	S105
923891214905	13186 90W GX5.3 14.5V 1CT/24	GX5.3	S105
923919720501	13163 250W GX5.3 24V 1CT/10X5F	GX5.3	UNIVERSAL
923921019894	5995 EJM 150W GX5.3 21V 1CT/24	GX5.3	S90
923921120594	13164 200W GX5.3 24V 1CT/24	GX5.3	S90
923931518205	13289 50W GX5.3 13.8V 1CT/24	GX5.3	UNIVERSAL
924010319894	13629 150W GX5.3 21V 1CT/24	GX5.3	S90
924059828302	13938XHP 50W GX5.3 22.8V 1CT/24	GX5.3	UNIVERSAL
924793618594	JCR 15V 150W H5 24 PACK	GZ6.35	S90
923883810105	13528 15W GZ4 6V 1CT/24	GZ4	S105
923916717104	6834 100W GZ6.35 12V	GZ6.35	P90/P15
923916818504	6423 150W GZ6.35 15V 1CT/10X5F	GZ6.35	P90/P15
924048218504	6423FO 150W GZ6.35 15V 1CT/10X5F	GZ6.35	P90/P15
924048417104	6834FO 100W GZ6.35 12V 1CT/10X5F	GZ6.35	P90/P15

Light Technical

Order Code	Full Product Name	Correlated Color Temperature (Nom)
923921419794	DDL 150W 20V 24PK	3150 K
923891214905	13186 90W GX5.3 14.5V 1CT/24	3200 K
923919720501	13163 250W GX5.3 24V 1CT/10X5F	-
923921019894	5995 EJM 150W GX5.3 21V 1CT/24	-
923921120594	13164 200W GX5.3 24V 1CT/24	-
923931518205	13289 50W GX5.3 13.8V 1CT/24	-
924010319894	13629 150W GX5.3 21V 1CT/24	-
924059828302	13938XHP 50W GX5.3 22.8V 1CT/24	3200 K
924793618594	JCR 15V 150W H5 24 PACK	3100 K
923883810105	13528 15W GZ4 6V 1CT/24	2900 K
923916717104	6834 100W GZ6.35 12V	3330 K
923916818504	6423 150W GZ6.35 15V 1CT/10X5F	3380 K
924048218504	6423FO 150W GZ6.35 15V 1CT/10X5F	3380 K
924048417104	6834FO 100W GZ6.35 12V 1CT/10X5F	3330 K

Operating and Electrical

Order Code	Full Product Name	Power Consumption
923921419794	DDL 150W 20V 24PK	150 W
923891214905	13186 90W GX5.3 14.5V 1CT/24	90 W
923919720501	13163 250W GX5.3 24V 1CT/10X5F	250 W
923921019894	5995 EJM 150W GX5.3 21V 1CT/24	150 W
923921120594	13164 200W GX5.3 24V 1CT/24	200 W

Order Code	Full Product Name	Power Consumption
923931518205	13289 50W GX5.3 13.8V 1CT/24	50 W
924010319894	13629 150W GX5.3 21V 1CT/24	150 W
924059828302	13938XHP 50W GX5.3 22.8V 1CT/24	50 W
924793618594	JCR 15V 150W H5 24 PACK	150 W
923883810105	13528 15W GZ4 6V 1CT/24	15 W
923916717104	6834 100W GZ6.35 12V	100 W
923916818504	6423 150W GZ6.35 15V 1CT/10X5F	150 W
924048218504	6423FO 150W GZ6.35 15V 1CT/10X5F	150 W
924048417104	6834FO 100W GZ6.35 12V 1CT/10X5F	100 W

Mechanical and Housing

Order Code	Full Product Name	Bulb Shape
923921419794	DDL 150W 20V 24PK	R50
923891214905	13186 90W GX5.3 14.5V 1CT/24	R50
923919720501	13163 250W GX5.3 24V 1CT/10X5F	R50
923921019894	5995 EJM 150W GX5.3 21V 1CT/24	-
923921120594	13164 200W GX5.3 24V 1CT/24	-
923931518205	13289 50W GX5.3 13.8V 1CT/24	R50
924010319894	13629 150W GX5.3 21V 1CT/24	-
924059828302	13938XHP 50W GX5.3 22.8V 1CT/24	R50
924793618594	JCR 15V 150W H5 24 PACK	R50
923883810105	13528 15W GZ4 6V 1CT/24	R35
923916717104	6834 100W GZ6.35 12V	R50
923916818504	6423 150W GZ6.35 15V 1CT/10X5F	R50
924048218504	6423FO 150W GZ6.35 15V 1CT/10X5F	R50
924048417104	6834FO 100W GZ6.35 12V 1CT/10X5F	R50

© 2026 Signify Holding. All rights reserved. The information provided herein is subject to change, without notice. Signify does not give any representation or warranty as to the accuracy or completeness of the information included herein and shall not be liable for any action in reliance thereon. The information presented in this document is not intended as any commercial offer and does not form part of any quotation or contract, unless otherwise agreed by Signify. Philips and the Philips Shield Emblem are registered trademarks of Koninklijke Philips N.V.