PHILIPS

MSD Gold™ MiniFastFit

XDMSDMG



MSD Gold™ MiniFastFit – replacement in seconds + longer life

The specially designed lamp base of the MSD Gold™ MiniFastFit means that this lamp can be replaced in just seconds, helping to ensure non-stop entertainment. In addition, the innovative gold plated pins ensure excellent current transfer to prolong lamp and lamp holder lifetimes and thereby reduce lamp replacement costs. The lamp's compact size allows for easy handling and compact fixture designs, while the very short arc provides a high perceived brightness and high beam intensity. What's more, the MSD Gold™ MiniFastFit has an extended lifetime, which further reduces lamp replacement costs.

Benefits

- Lamp replacement in just seconds
- Easy handling, smaller and lighter fixtures
- Reduces early lamp or lamp holder failures. Excellent current transfer
- High perceived brightness
- High beam intensity
- Less lamp replacement

Applications

- Discos
- Clubs
- Display lighting

Features

- Philips MiniFastFit
- Compact design
- Innovative gold plated pins
- Color temperature >8000K
- Very short arc
- Long lifetime (2000hrs)
- A lamp breaking is extremely unlikely to have any impact on your health. If a lamp breaks, ventilate the room for 30 minutes and remove the parts, preferably with gloves. Put them in a sealed plastic bag and take it to your local waste facilities for recycling. Do not use a vacuum cleaner.

Versions



XPPR XDMSD 0004

Dimensional drawing

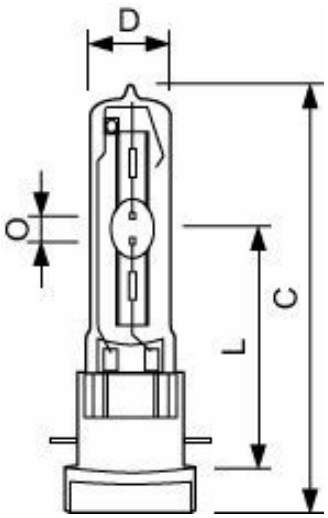

Product	D (max)	O	L (min)	L (max)	L	C (max)
MSD Gold 300/2 MiniFastFit 1CT/16	23 mm	5.0 mm	65.8 mm	67.8 mm	66.8 mm	126 mm

General Information

Cap-Base	PGJX28
Operating Position	UNIVERSAL [Any or Universal (U)]

Light Technical

Color Code	2
Luminous Flux	21,000 lm
Correlated Color Temperature (Nom)	8600 K
Color rendering index (CRI)	73

Operating and Electrical

Power Consumption	300 W
Lamp Current (Nom)	3.8 A

Controls and Dimming

Dimmable	No

© 2026 Signify Holding. All rights reserved. The information provided herein is subject to change, without notice. Signify does not give any representation or warranty as to the accuracy or completeness of the information included herein and shall not be liable for any action in reliance thereon. The information presented in this document is not intended as any commercial offer and does not form part of any quotation or contract, unless otherwise agreed by Signify. Philips and the Philips Shield Emblem are registered trademarks of Koninklijke Philips N.V.