PHILIPS

EM160T TRK 2S OA NM3 ELP BK IP20

912401483657



Emergency Track Spot, 4.8 W, 1.7 W, 4.8 W, 329x46mm; H97, 250 lm, 6500 K, IP20, ELB3h/ELP3h, Maintained, Non-maintained

329x46mm; H97, Polycarbonate, Black RAL 9004, Signal black (RAL9004), 3-circuit power track adapter GA69 (connection point) for XTS and XTSF tracks, Recessed, 250 lm, 4.8 W, 147 lm/W, 6500 K, (0.346, 0.356) SDCM<6, CRI80, Wide beam, Clear, UV stabilized Polycarbonate cover, IP20 | Finger-protected, IK03 | 0.3 J, Safety class II, 3C Track, TP(a) diffuser flammability class, Emergency lighting 3 hours duration Pro version

Warnings and Safety

- The battery is designed with a rated average battery design life of 50,000 hours in stand-by mode. The battery is supported with a standard 3year warranty; conditional of the product being maintained and operated in accordance with the manufacturer's guidelines and tested in accordance with EN50272

General Information

Number of gear units	1 unit
Driver included	Yes
Sustainability rating	Unclassified
Service tag	No
Value ladder	Performance
Warranty period	5 years

Light Technical

Luminous Flux	250 lm
Correlated Color Temperature (Nom)	6500 K
Luminous Efficacy (rated) (Nom)	147 lm/W
Color rendering index (CRI)	≥80
Light source color	865 cool daylight
Optic type	Wide beam
Luminaire light beam spread	105°
Unified glare rating CEN	Not applicable

Operating and Electrical

Input Voltage	220-240 V
Line Frequency	50 Hz
Inrush current	6.96 A
Inrush time	0.158 ms
Power Consumption	4.8 W
Power Factor (Fraction)	0.20
Connection	3C Track
Cable	-
Number of products on MCB of 16 A type B	218
Suitable for random switching	Not applicable
Protection class IEC	Safety class II
Feed-through wiring	-

Wiring

Connector Type	-

Controls and Dimming

Dimmable	No
Driver/power unit/transformer	-
Control interface	-
Constant light output	No
Photocell	-

Mechanical and Housing

Housing Material	Polycarbonate
Reflector material	-
Optic material	Polycarbonate
Optical cover material	UV stabilized Polycarbonate cover
Fixation material	Polyamide
Housing Color	Black RAL 9004
Optical cover finish	Clear
Overall length	329 mm
Overall width	46 mm
Overall height	97 mm
Dimensions (Height x Width x Depth)	97 x 46 x 329 mm
Ingress protection code	IP20 [Finger-protected]
Mech. impact protection code	IK03 [0.3 J]
Explosion hazard class	-
Mounting	3-circuit power track adapter GA69 (connection point) for XTS and XTSF tracks
Net Weight (Piece)	0.042 kg

Emergency Operation

Emergency flux	250 lm
Power consumption during Central DC emergency mode	1.7 W
Rated duration of the emergency lighting (when fully charged)	3 hour(s)
Additional max. power consumption when emergency battery is charging	4.8 W
Central Emergency	No
Type of emergency lighting battery	Lithium
Emergency lighting	Emergency lighting 3 hours duration Pro version
Emergency function testing method	Automatic pre-programmed self testing
Emergency lighting operation mode	Maintained

Approval and Application

Glow-wire test	Temperature 850 °C, duration 30 s
Flammability mark	-
CE mark	Yes
ENEC mark	-
Photobiological risk	Photobiological risk group 0 @ 200mm to EN62471
EU RoHS compliant	Yes
Diffuser Flammability Class	TP(a) diffuser flammability class
Performance ambient temperature Tq	25 °C
Flickering value (PstLM) - Flickering value as per EN 61000-3-3	1
Stroboscopic effect visibility measure (SVM)	0.4
Ambient temperature range	0 to +45 °C

Initial Performance (IEC Compliant)

Luminous flux tolerance	+/-5%
Initial chromaticity	(0.346, 0.356) SDCM<6
Power consumption tolerance	+/-10%

Over Time Performance (IEC Compliant)

Control gear failure rate at median useful life 35000 h	5 %
Control gear failure rate at median useful life 50000 h	10 %
Control gear failure rate at median useful life 75000 h	25 %
Control gear failure rate at median useful life 100000 h	50 %
Lumen maintenance (EN-IEC 62722-2-1) at median useful life* 35000 h	L95
Lumen maintenance (EN-IEC 62722-2-1) at median useful life* 50000 h	L95
Lumen maintenance (EN-IEC 62722-2-1) at median useful life* 75000 h	L90
Lumen maintenance (EN-IEC 62722-2-1) at median useful life* 100000 h	L90

Sustainability Data

Repair class	Repair Class C, the driver of this luminaire can be replaced by a service technician. Special care is required during disassembly and reassembly, and specific tools may be required. Parts and documentation are available for a period of time.
Non-virgin material ratio of the packaging	Cardboard > 80% recycled
Packaging Recyclable content ratio	Cardboard recycling rate > 80%
Packaging Material	Cardboard

Product Data

Order product name	EM160T TRK 2S OA NM3 ELP BK IP20
Full product name	EM160T TRK 2S OA NM3 ELP BK IP20
Order code	912401483657
Material Nr. (12NC)	912401483657
Numerator - Quantity Per Pack	1
EAN/UPC - Product/Case	8719514880917
Numerator - Packs per outer box	10
EAN/UPC - Case	8719514880894

Dimensional drawing

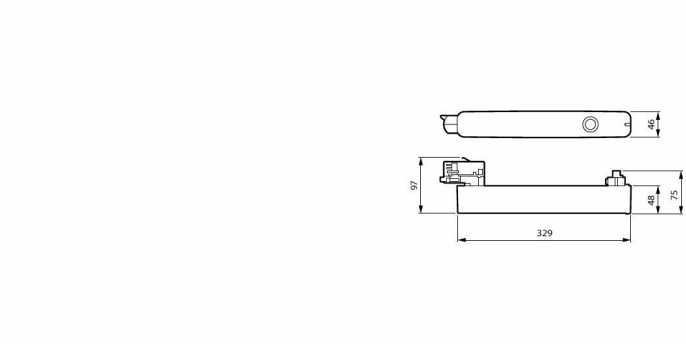

Related Documents

Documents and certificates	Document Name	Download
Installation Instructions	Emergency-Track-Spot-EM160T-v2-INI.pdf	Download

© 2026 Signify Holding. All rights reserved. The information provided herein is subject to change, without notice. Signify does not give any representation or warranty as to the accuracy or completeness of the information included herein and shall not be liable for any action in reliance thereon. The information presented in this document is not intended as any commercial offer and does not form part of any quotation or contract, unless otherwise agreed by Signify. Philips and the Philips Shield Emblem are registered trademarks of Koninklijke Philips N.V.