PHILIPS

## WT050C 2xTLED L600

911401812287



# Ledinaire Waterproof Tube Housing

IP65 | Dust penetration-protected, jet-proof, IK08 | 5 J vandal-protected

### General Information

| | |
|---|---|
| Value ladder | Value |
| Warranty period | 5 years |

### Mechanical and Housing

| | |
|---|---|
| Overall length | 670 mm |
| Overall width | 93 mm |
| Overall height | 70 mm |
| Overall diameter | 0 mm |
| Dimensions (Height x Width x Depth) | 70 x 93 x 670 mm |
| Material | Polycarbonate |
| Ingress protection code | IP65 [Dust penetration-protected, jet-proof] |
| Mech. impact protection code | IK08 [5 J vandal-protected] |
| Accessory color | Gray |
| Net Weight (Piece) | 0.500 kg |

### Approval and Application

| | |
|---|---|
| CE mark | Yes |
| EU RoHS compliant | Yes |

### Sustainability Data

| | |
|---|---|
| Non-virgin material ratio of the packaging | Cardboard > 80% recycled |
| Packaging Recyclable content ratio | Cardboard recycling rate > 80% |
| Packaging Material | Cardboard |

### Product Data

| | |
|---|---|
| Order product name | WT050C 2xTLED L600 |
| Full product name | WT050C 2xTLED L600 |
| Full product code | 872016975325999 |
| Order code | 911401812287 |
| Material Nr. (12NC) | 911401812287 |
| Numerator - Quantity Per Pack | 1 |
| EAN/UPC - Product/Case | 8720169753259 |
| Numerator - Packs per outer box | 16 |
| EAN/UPC - Case | 8720169753341 |

## Dimensional drawing

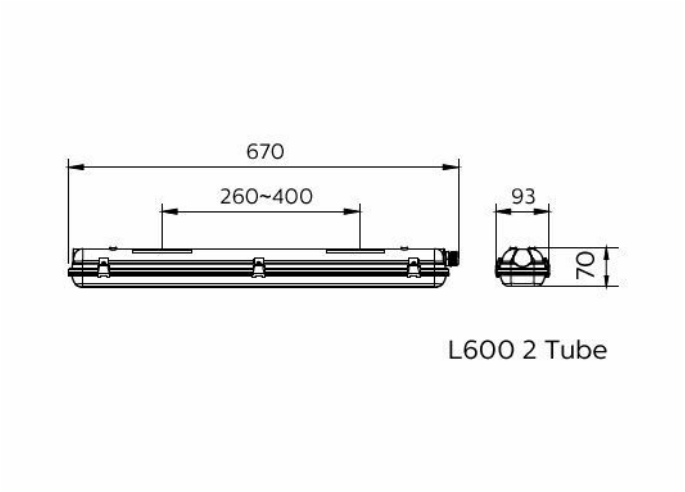


## Compatible Accesories

| Accessory Image | Accessory Code | Accessory Name | Website |
|---|---|---|---|
| 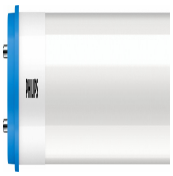 | 929003158702 | CorePro LEDtube 600mm HO 8W 865 T8 | Product Website |
| 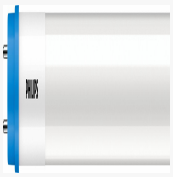 | 929003547202 | CorePro LEDtube 600mm 8W 840 T8 | Product Website |

## Related Documents

| Documents and certificates | Document Name | Download |
|---|---|---|
| Installation Instructions | WT050C-MI-v2024-01.pdf | Download |

© 2026 Signify Holding. All rights reserved. The information provided herein is subject to change, without notice. Signify does not give any representation or warranty as to the accuracy or completeness of the information included herein and shall not be liable for any action in reliance thereon. The information presented in this document is not intended as any commercial offer and does not form part of any quotation or contract, unless otherwise agreed by Signify. Philips and the Philips Shield Emblem are registered trademarks of Koninklijke Philips N.V.