PHILIPS

Essential Smartbright Wide Batten BN005C

7961647



Essential Smartbright Wide Batten is a slim design and provide flexibility to customer to choose from 3 CCT and 2 wattage options, based on their specific need.

Philips Essential smartbright wide batten offers exceptional value. It is Perfect for your everyday lighting installations. Available in 2 standard sizes, it has option of 3 CCTs to suit different requirements.

Benefits

- 20K Hrs life @L70B50@ta25, 2 Years warranty
- 100 Lm/Watt efficacy
- CCC/CB/CE Certified

Applications

- Airports
- Warehouses
- Hospitality

Features

- 20K Hrs life @L70B50@ta25, 2 Years warranty
- 2 power output, 3 CCT Option to suit different need
- 100 Lm/Watt
- CRI 80

Versions

BN005 L1200 STD

BN005 L1600 STD

Dimensional drawing

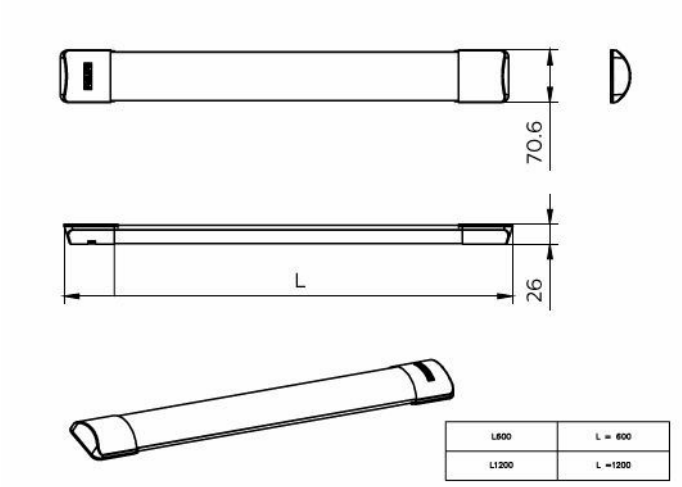

BN005C LED22/WW L600 PSU GM

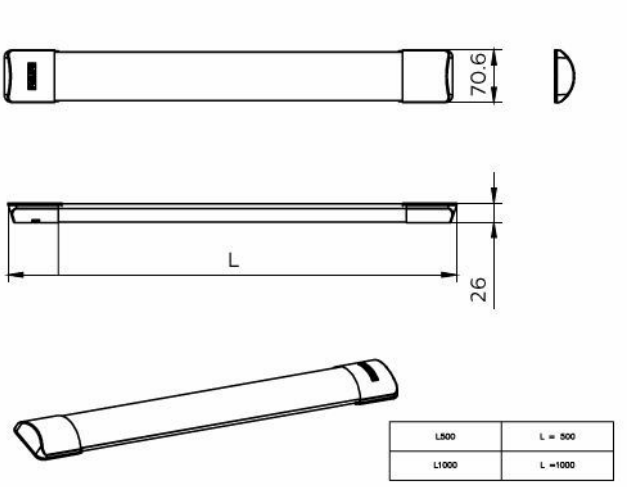

BN005C LED22/WW L1000 PSU LA

General Information

Number of gear units	1 unit
Gear	EB [Electronic]
Driver included	Yes

Light Technical

Number of light sources	1
Beam angle of light source	115 degree(s)
Optic type	Symmetrical

Operating and Electrical

Line Frequency	50 or 60 Hz
Suitable for random switching	No
Protection class IEC	Safety class II

Controls and Dimming

Dimmable	-
Maximum dim level	Not applicable

Mechanical and Housing

Housing Color	White
Ingress protection code	IP20 [Finger-protected]
Mech. impact protection code	IK02 [0.2 J standard]
Optical cover type	Opal

Approval and Application

Glow-wire test	Temperature 650 °C, duration 30 s
Flammability mark	For mounting on normally flammable surfaces
CE mark	No
ENEC mark	-
Ambient temperature range	-20 to +40 °C

Initial Performance (IEC Compliant)

Luminous flux tolerance	-10% / +10%

Light Technical

Order Code	Full Product Name	Luminous Flux	Correlated Color Temperature (Nom)	Luminous Efficacy (rated) (Nom)	Color rendering index (CRI)
911401828387	BN005C LED22/WW L1000 PSU LA	2,040 lm	3000 K	88 lm/W	≥70
911401828487	BN005C LED22/NW L1000 PSU LA	2,200 lm	4000 K	95 lm/W	≥70
911401828587	BN005C LED22/CW L1000 PSU LA	2,200 lm	6500 K	95 lm/W	≥70
911401899384	BN005C LED40/WW L1200 PSU GM	3,800 lm	3000 K	95 lm/W	≥80
911401899484	BN005C LED40/NW L1200 PSU GM	4,000 lm	4000 K	100 lm/W	≥80
911401899584	BN005C LED40/CW L1200 PSU GM	4,000 lm	6500 K	100 lm/W	≥80
911401828087	BN005C LED11/WW L500 PSU LA	1,020 lm	3000 K	88 lm/W	≥70
911401828187	BN005C LED11/NW L500 PSU LA	1,100 lm	4000 K	95 lm/W	≥70
911401828287	BN005C LED11/CW L500 PSU LA	1,100 lm	6500 K	95 lm/W	≥70
911401899084	BN005C LED22/WW L600 PSU GM	1,100 lm	3000 K	105 lm/W	≥80
911401899184	BN005C LED22/NW L600 PSU GM	2,200 lm	4000 K	110 lm/W	≥80
911401899284	BN005C LED22/CW L600 PSU GM	2,200 lm	6500 K	110 lm/W	≥80

Operating and Electrical

Order Code	Full Product Name	Input Voltage	Power Consumption
911401828387	BN005C LED22/WW L1000 PSU LA	120/240 V	23 W

Order Code	Full Product Name	Input Voltage	Power Consumption
911401828487	BN005C LED22/NW L1000 PSU LA	120/240 V	23 W
911401828587	BN005C LED22/CW L1000 PSU LA	120/240 V	23 W
911401899384	BN005C LED40/WW L1200 PSU GM	220 to 240 V	40 W
911401899484	BN005C LED40/NW L1200 PSU GM	220 to 240 V	40 W
911401899584	BN005C LED40/CW L1200 PSU GM	220 to 240 V	40 W
911401828087	BN005C LED11/WW L500 PSU LA	120/240 V	11.5 W
911401828187	BN005C LED11/NW L500 PSU LA	120/240 V	11.5 W
911401828287	BN005C LED11/CW L500 PSU LA	120/240 V	11.5 W
911401899084	BN005C LED22/WW L600 PSU GM	220 to 240 V	20 W
911401899184	BN005C LED22/NW L600 PSU GM	220 to 240 V	20 W
911401899284	BN005C LED22/CW L600 PSU GM	220 to 240 V	20 W

Initial Performance (IEC Compliant)

Order Code	Full Product Name	Initial chromaticity
911401828387	BN005C LED22/WW L1000 PSU LA	(0.44, 0.40) SDCM≤7
911401828487	BN005C LED22/NW L1000 PSU LA	(0.38, 0.38) SDCM≤7
911401828587	BN005C LED22/CW L1000 PSU LA	(0.31, 0.34) SDCM≤7
911401899384	BN005C LED40/WW L1200 PSU GM	(0.43, 0.40) SDCM≤6
911401899484	BN005C LED40/NW L1200 PSU GM	(0.38, 0.38) SDCM≤6
911401899584	BN005C LED40/CW L1200 PSU GM	(0.31, 0.33) SDCM≤6
911401828087	BN005C LED11/WW L500 PSU LA	(0.44, 0.40) SDCM≤7
911401828187	BN005C LED11/NW L500 PSU LA	(0.38, 0.38) SDCM≤7
911401828287	BN005C LED11/CW L500 PSU LA	(0.31, 0.34) SDCM≤7
911401899084	BN005C LED22/WW L600 PSU GM	(0.43, 0.40) SDCM≤6
911401899184	BN005C LED22/NW L600 PSU GM	(0.38, 0.38) SDCM≤6
911401899284	BN005C LED22/CW L600 PSU GM	(0.31, 0.33) SDCM≤6

© 2026 Signify Holding. All rights reserved. The information provided herein is subject to change, without notice. Signify does not give any representation or warranty as to the accuracy or completeness of the information included herein and shall not be liable for any action in reliance thereon. The information presented in this document is not intended as any commercial offer and does not form part of any quotation or contract, unless otherwise agreed by Signify. Philips and the Philips Shield Emblem are registered trademarks of Koninklijke Philips N.V.