PHILIPS

PL-C 4-PIN

10242200



Efficient and effective new shape

PL-C new shape is an efficient and effective medium wattage fluorescent lamp, used in general downlights for retail, hospitality and office applications.The 2 PIN version is designed for electromagnetic gear and is provided with plug in/pull out lamp base. The 4 PIN version is designed for operation on electronic HF control gear with integrated pre-heat and is provided with a plug-in/pull-out lamp base.

Benefits

- Good color rendering
- Optimal light performance
- Sustainable lighting solution

Features

- Easy installation
- Tri-phosphor technology

Applications

- Designed for general or supplementary lighting in professional or home environments
- Recessed or surface-mounted downlighters, wall units, table lamps and pendant lamps

- Lamp light technical and electrical characteristics are influenced by operating conditions, i.e. lamp ambient temperature and operating position as well as applied HF control gear
- Shorter lamp life when often switching and not well pre-heated electrodes
- A lamp breaking is extremely unlikely to have any impact on your health. If a lamp breaks, ventilate the room for 30 minutes and remove the parts, preferably with gloves. Put them in a sealed plastic bag and take it to your local waste facilities for recycling. Do not use a vacuum cleaner.

Versions

PL-C 26W 4P



PL-C 13W 4P



PL-C 18W 4P



Dimensional drawing

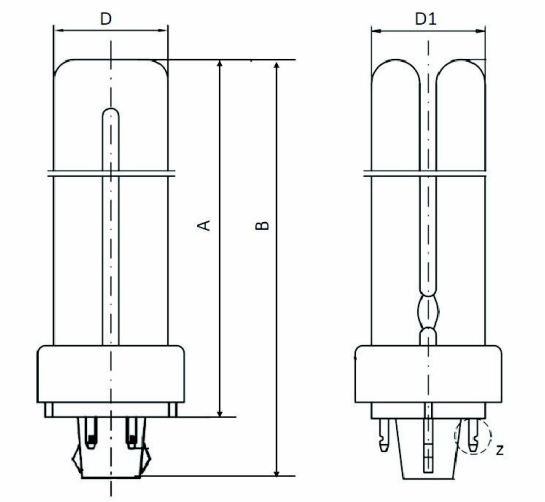

Product	D (max)	D1 (max)	A	B
PL-C 13W/827/4P 1CT/5X10BOX	26 mm	26 mm	112.5 mm	129 mm
PL-C 13W/830/4P 1CT/5X10BOX	26 mm	26 mm	112.5 mm	129 mm
PL-C 13W/840/4P 1CT/5X10BOX	26 mm	26 mm	112.5 mm	129 mm
PL-C 13W/865/4P 1CT/5X10BOX	26 mm	26 mm	112.5 mm	129 mm
PL-C 18W/827/4P 1CT/5X10BOX	26 mm	26 mm	127.5 mm	143.5 mm
PL-C 18W/830/4P 1CT/5X10BOX	26 mm	26 mm	127.5 mm	143.5 mm
PL-C 18W/840/4P 1CT/5X10BOX	26 mm	26 mm	127.5 mm	143.5 mm
PL-C 18W/865/4P 1CT/5X10BOX	26 mm	26 mm	127.5 mm	143.5 mm
PL-C 26W/830/4P 1CT/5X10BOX	26 mm	26 mm	146.5 mm	162.5 mm
PL-C 26W/840/4P 1CT/5X10BOX	26 mm	26 mm	146.5 mm	162.5 mm
PL-C 26W/865/4P 1CT/5X10BOX	26 mm	26 mm	146.5 mm	162.5 mm

General Information

Nominal lifetime	8,000 hour(s)

Light Technical

Color rendering index (CRI)	>80

Controls and Dimming

Dimmable	Yes

Mechanical and Housing

Bulb Shape	PL-C

Approval and Application

Mercury (Hg) Content (Nom)	1.3

General Information

Order Code	Full Product Name	Cap-Base
927813083001	PL-C 26W/830/4P 1CT/5X10BOX	G24q-3
927813084001	PL-C 26W/840/4P 1CT/5X10BOX	G24q-3
927813086501	PL-C 26W/865/4P 1CT/5X10BOX	G24q-3
927812682701	PL-C 13W/827/4P 1CT/5X10BOX	G24q-1
927812683001	PL-C 13W/830/4P 1CT/5X10BOX	G24q-1
927812684001	PL-C 13W/840/4P 1CT/5X10BOX	G24q-1
927812686501	PL-C 13W/865/4P 1CT/5X10BOX	G24q-1
927812882701	PL-C 18W/827/4P 1CT/5X10BOX	G24q-2
927812883001	PL-C 18W/830/4P 1CT/5X10BOX	G24q-2
927812884001	PL-C 18W/840/4P 1CT/5X10BOX	G24q-2
927812886501	PL-C 18W/865/4P 1CT/5X10BOX	G24q-2

Light Technical

Order Code	Full Product Name	Luminous Flux	Color Designation	Chromaticity Coordinate X (Nom)	Chromaticity Coordinate Y (Nom)	Correlated Color Temperature (Nom)	Luminous Efficacy (rated) (Nom)
927813083001	PL-C 26W/830/4P 1CT/5X10BOX	1,800 lm	Warm White (WW)	440	403	3000 K	67 lm/W
927813084001	PL-C 26W/840/4P 1CT/5X10BOX	1,800 lm	Cool White (CW)	380	380	4000 K	67 lm/W
927813086501	PL-C 26W/865/4P 1CT/5X10BOX	1,700 lm	Cool Daylight	313	337	6500 K	65 lm/W
927812682701	PL-C 13W/827/4P 1CT/5X10BOX	900 lm	Incandescent White	463	420	2700 K	67 lm/W
927812683001	PL-C 13W/830/4P 1CT/5X10BOX	900 lm	Warm White (WW)	440	403	3000 K	67 lm/W

Order Code	Full Product Name	Luminous Flux	Color Designation	Chromaticity Coordinate X (Nom)	Chromaticity Coordinate Y (Nom)	Correlated Color Temperature (Nom)	Luminous Efficacy (rated) (Nom)
927812684001	PL-C 13W/840/4P 1CT/5X10BOX	900 lm	Cool White (CW)	380	380	4000 K	67 lm/W
927812686501	PL-C 13W/865/4P 1CT/5X10BOX	840 lm	Cool Daylight	313	337	6500 K	62 lm/W
927812882701	PL-C 18W/827/4P 1CT/5X10BOX	1,200 lm	Incandescent White	463	420	2700 K	67 lm/W
927812883001	PL-C 18W/830/4P 1CT/5X10BOX	1,200 lm	Warm White (WW)	440	403	3000 K	67 lm/W
927812884001	PL-C 18W/840/4P 1CT/5X10BOX	1,200 lm	Cool White (CW)	380	380	4000 K	67 lm/W
927812886501	PL-C 18W/865/4P 1CT/5X10BOX	1,100 lm	Cool Daylight	313	337	6500 K	62 lm/W

Operating and Electrical

Order Code	Full Product Name	Power Consumption	Lamp Current (Nom)
927813083001	PL-C 26W/830/4P 1CT/5X10BOX	26.5 W	325 mA
927813084001	PL-C 26W/840/4P 1CT/5X10BOX	26.5 W	325 mA
927813086501	PL-C 26W/865/4P 1CT/5X10BOX	26.5 W	325 mA
927812682701	PL-C 13W/827/4P 1CT/5X10BOX	13.4 W	175 mA
927812683001	PL-C 13W/830/4P 1CT/5X10BOX	13.4 W	175 mA
927812684001	PL-C 13W/840/4P 1CT/5X10BOX	13.4 W	175 mA
927812686501	PL-C 13W/865/4P 1CT/5X10BOX	13.4 W	175 mA
927812882701	PL-C 18W/827/4P 1CT/5X10BOX	18.3 W	220 mA
927812883001	PL-C 18W/830/4P 1CT/5X10BOX	18.3 W	220 mA
927812884001	PL-C 18W/840/4P 1CT/5X10BOX	18.3 W	220 mA
927812886501	PL-C 18W/865/4P 1CT/5X10BOX	18.3 W	220 mA

© 2026 Signify Holding. All rights reserved. The information provided herein is subject to change, without notice. Signify does not give any representation or warranty as to the accuracy or completeness of the information included herein and shall not be liable for any action in reliance thereon. The information presented in this document is not intended as any commercial offer and does not form part of any quotation or contract, unless otherwise agreed by Signify. Philips and the Philips Shield Emblem are registered trademarks of Koninklijke Philips N.V.