PHILIPS

WT201C LED44S-4000 PSU L120 S2

919515812985



Built for performance - Waterproof Lighting solution for Dusty and Humid application

Smartbright Waterproof luminaire is a special application luminaire designed to provide undisrupted lighting for dusty and humid indoor application. It is a perfect solution for lighting up indoor spaces like multilevel car park, open canopies in bus stations and general industrial applications. The luminaire has all-weather polycarbonate housing and highly efficient electronics with LED system to offer long useful life even in adverse application and environmental conditions. With unique design, variety of options in lumen packs and color temperature makes it suitable for diverse applications.

Warnings and Safety

- Meant for Indoor Application Only. Should not be used in outdoor exposed to Sun and Rain.

General Information

Driver included	Yes
Light source engine type	LED
Warranty period	2 years

Light Technical

Luminous Flux	4,400 lm
Correlated Color Temperature (Nom)	4000 K
Luminous Efficacy (rated) (Nom)	120 lm/W
Color rendering index (CRI)	>80
Beam angle of light source	120 degree(s)
Light source color	840 neutral white

Optic type	Beam angle 120°
Luminaire light beam spread	120°

Operating and Electrical

Input Voltage	140-270 V
Line Frequency	50 Hz
Power Consumption	36 W
Power Factor (Fraction)	0.95
Protection class IEC	Safety class I
Surge Protection (Common/ Differential)	Surge protection level until 4 kV

Controls and Dimming

Dimmable	No
Control interface	-

Mechanical and Housing

Housing Material	Polycarbonate
Optic material	Polycarbonate
Optical cover material	Polycarbonate
Housing Color	Gray
Mounting device	External Click Fix Mounting Bracket
Material	Polycarbonate
Ingress protection code	IP65 [Dust penetration-protected, jet-proof]
Mech. impact protection code	IK08 [5 J vandal-protected]

Dimensional drawing

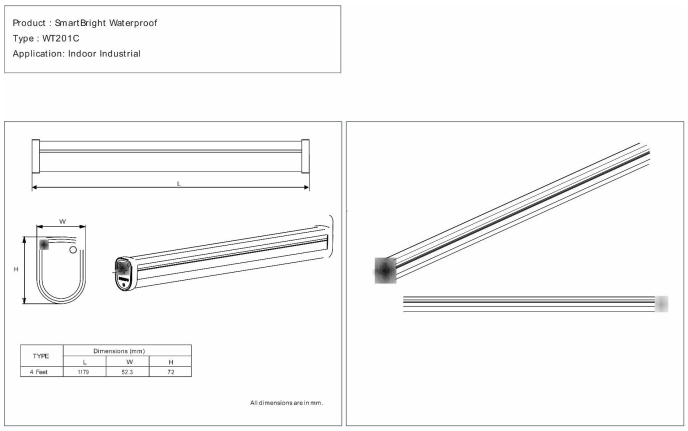

Optical cover type	Polycarbonate
Net Weight (Piece)	1.200 kg

Approval and Application

Flammability mark	For mounting on normally flammable surfaces
Ambient temperature range	0 to +45 °C

Initial Performance (IEC Compliant)

Initial chromaticity	<5
Power consumption tolerance	+/-10%

Over Time Performance (IEC Compliant)

Median useful life L70B50	50,000 hour(s)

Product Data

Order product name	WT201C LED44S-4000 PSU L120 S2
Full product name	WT201C LED44S-4000 PSU L120 S2
Order code	919515812985
Material Nr. (12NC)	919515812985
Numerator - Quantity Per Pack	1
Numerator - Packs per outer box	6

Related Documents

Documents and certificates	Document Name	Download
Installation Instructions	Smartbright_Waterproof Batten-WT201C-INI.pdf	Download

Photometry and lighting design	Document Name	Download
IES File	Smartbright-WT201C LED44S-4000 PSU L120 S2.IES	Download

© 2026 Signify Holding. All rights reserved. The information provided herein is subject to change, without notice. Signify does not give any representation or warranty as to the accuracy or completeness of the information included herein and shall not be liable for any action in reliance thereon. The information presented in this document is not intended as any commercial offer and does not form part of any quotation or contract, unless otherwise agreed by Signify. Philips and the Philips Shield Emblem are registered trademarks of Koninklijke Philips N.V.