PHILIPS

# 31600 Trunklinea Plus LED3/CW L300 GM

911401868280



## Trunklinea Plus, 4 W, 300 lm, 3000 K

The new Philips Trunklinea Plus offers exceptional value. It is Perfect for your everyday lighting installations. Available in 4 standard sizes and 3 CCTs to provide flexibility to customer. It provide quality light and substantial energy and maintenance savings. This new batten range can be used to replace traditional battens with T5 fluorescent lamps.

### General Information

| | |
|---|---|
| Light source engine type | LED |

### Light Technical

| | |
|---|---|
| Luminous Flux | 300 lm |
| Correlated Color Temperature (Nom) | 3000 K |
| Luminous Efficacy (rated) (Nom) | 80 lm/W |
| Color rendering index (CRI) | >70 |
| Light source color | 765 cool daylight |

### Operating and Electrical

| | |
|---|---|
| Input Voltage | 220 to 240 V |
| Line Frequency | 50 or 60 Hz |
| Power Consumption | 4 W |
| Power Factor (Fraction) | 0.5 |
| Number of products on MCB of 16 A type B | 8 |
| Protection class IEC | Safety class II |

### Controls and Dimming

| | |
|---|---|
| Dimmable | No |
| Control interface | - |

## Mechanical and Housing

| | |
|---|---|
| Housing Material | Polycarbonate |
| Optical cover material | Polycarbonate |
| Housing Color | White |
| Optical cover finish | Opal |
| Overall length | 325 mm |
| Overall width | 21 mm |
| Overall height | 32.3 mm |
| Dimensions (Height x Width x Depth) | 32 x 21 x 325 mm |
| Ingress protection code | IP20 [Finger-protected] |
| Mech. impact protection code | IK02 [0.2 J standard] |
| Optical cover type | Opal diffuser in polycarbonate cover |
| Net Weight (Piece) | 0.050 kg |

## Approval and Application

| | |
|---|---|
| CE mark | No |
| Ambient temperature range | -20 to +40 °C |

## Dimensional drawing

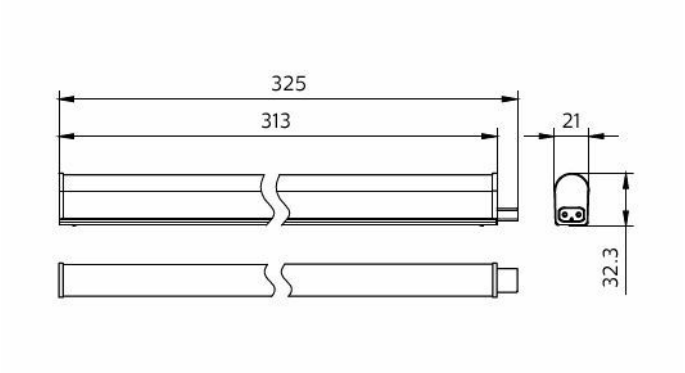


## Initial Performance (IEC Compliant)

| | |
|---|---|
| Luminous flux tolerance | +/-10% |
| Power consumption tolerance | +/-10% |

## Product Data

| | |
|---|---|
| Order product name | 31600 Trunklinea Plus LED3/CW L300 GM |
| Full product name | 31600 Trunklinea Plus LED3/CW L300 GM |
| Full product code | 871016335540599 |
| Order code | 911401868280 |
| Material Nr. (12NC) | 911401868280 |
| Numerator - Quantity Per Pack | 1 |
| EAN/UPC - Product/Case | 8710163355405 |
| Numerator - Packs per outer box | 40 |
| EAN/UPC - Case | 8710163355641 |

## Related Documents

| Documents and certificates | Document Name | Download |
|---|---|---|
| Installation Instructions | MI TRUNKLINEA PLUS.pdf | Download |

| Photometry and lighting design | Document Name | Download |
|---|---|---|
| IES File | Trunklinea LED3NW L300.ies | Download |

© 2026 Signify Holding. All rights reserved. The information provided herein is subject to change, without notice. Signify does not give any representation or warranty as to the accuracy or completeness of the information included herein and shall not be liable for any action in reliance thereon. The information presented in this document is not intended as any commercial offer and does not form part of any quotation or contract, unless otherwise agreed by Signify. Philips and the Philips Shield Emblem are registered trademarks of Koninklijke Philips N.V.