PHILIPS

MASTERColour CDM-Rm Elite Mini

DCDMRMME



Perfect sparkle, easy application

Mini, very high-efficiency Ceramic Metal Halide discharge reflector lamp producing crisp white sparkling light with high color rendering

Benefits

- High-intensity beam of crisp white sparkling light makes merchandise look irresistible
- Easy to install and replace, reducing installation and relamping costs
- Fits in small luminaires which are less visible

Applications

- Accent and display lighting in retail
- General and decorative indoor lighting

Features

- Crisp white sparkling light
- Excellent color rendering, with extra red
- High efficacy with unparalleled lumen maintenance
- Mini design fitting in open luminaires
- UV-blocking front glass

- Use only with electronic control gear
- Control gear must include end-of-life protection (IEC61167, IEC 62035).
- A lamp breaking is extremely unlikely to have any impact on your health. If a lamp breaks, ventilate the room for 30 minutes and remove the parts, preferably with gloves. Put them in a sealed plastic bag and take it to your local waste facilities for recycling. Do not use a vacuum cleaner.

Versions



LPPR CDM-Rm 0008

Dimensional drawing

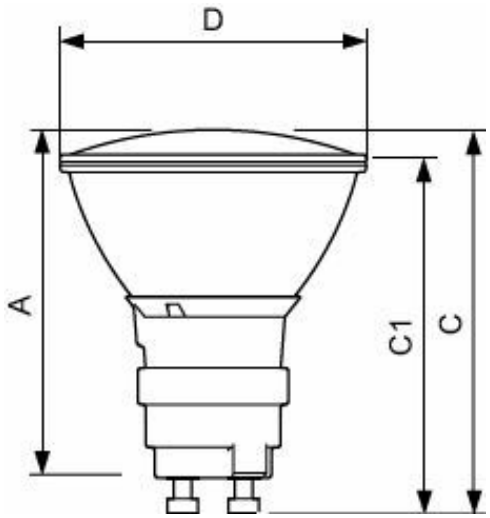

Product	D (max)	D	C (max)	C	C1 (max)	A (max)
CDM-Rm Elite Mini 20W/830 GX10 MR16 10D	51 mm	50 mm	65.4 mm	62.75 mm	60.9 mm	59 mm
CDM-Rm Elite Mini 20W/830 GX10 MR16 25D	51 mm	50 mm	65.4 mm	62.75 mm	60.9 mm	59 mm
CDM-Rm Elite Mini 20W/830 GX10 MR16 40D	51 mm	50 mm	65.4 mm	62.75 mm	60.9 mm	59 mm
CDM-Rm Elite Mini 35W/930 GX10 MR16 10D	51 mm	50 mm	65.4 mm	62.75 mm	60.9 mm	59 mm
CDM-Rm Elite Mini 35W/930 GX10 MR16 25D	51 mm	50 mm	65.4 mm	62.75 mm	60.9 mm	59 mm
CDM-Rm Elite Mini 35W/930 GX10 MR16 40D	51 mm	50 mm	65.4 mm	62.75 mm	60.9 mm	59 mm

General Information

Cap-Base	GX10
Operating Position	UNIVERSAL [Any or Universal (U)]
Switching Cycle	1,350

Light Technical

Chromaticity Coordinate X (Nom)	0.434
Chromaticity Coordinate Y (Nom)	0.398
Correlated Color Temperature (Nom)	3000 K

Operating and Electrical

Warm-up time to 60% light	120 s

Controls and Dimming

Dimmable	No

Mechanical and Housing

Bulb Shape	MR16

Light Technical

Order Code	Full Product Name	Beam Angle (Nom)	Luminous Flux	Luminous Intensity (Nom)	Luminous Efficacy (rated) (Nom)	Color rendering index (CRI)	LLMF At End Of Nominal Lifetime (Nom)
928191005331	CDM-Rm Elite Mini 20W/830 GX10 MR16 10D	10 degree(s)	880 lm	14,500 cd	49 lm/W	84	70 %
928191105331	CDM-Rm Elite Mini 20W/830 GX10 MR16 25D	25 degree(s)	900 lm	4,000 cd	50 lm/W	84	70 %
928191205331	CDM-Rm Elite Mini 20W/830 GX10 MR16 40D	40 degree(s)	860 lm	1,750 cd	50 lm/W	84	70 %
928194605330	CDM-Rm Elite Mini 35W/930 GX10 MR16 10D	10 degree(s)	2,100 lm	17,500 cd	60 lm/W	90	80 %
928194705330	CDM-Rm Elite Mini 35W/930 GX10 MR16 25D	25 degree(s)	2,150 lm	7,600 cd	60 lm/W	90	80 %
928194805330	CDM-Rm Elite Mini 35W/930 GX10 MR16 40D	40 degree(s)	2,150 lm	3,600 cd	61 lm/W	90	80 %

Operating and Electrical

Order Code	Full Product Name	Power Consumption	Voltage (Nom)
928191005331	CDM-Rm Elite Mini 20W/830 GX10 MR16 10D	20.1 W	95 V
928191105331	CDM-Rm Elite Mini 20W/830 GX10 MR16 25D	20.1 W	95 V
928191205331	CDM-Rm Elite Mini 20W/830 GX10 MR16 40D	20.1 W	95 V
928194605330	CDM-Rm Elite Mini 35W/930 GX10 MR16 10D	39.1 W	87 V
928194705330	CDM-Rm Elite Mini 35W/930 GX10 MR16 25D	39.1 W	87 V
928194805330	CDM-Rm Elite Mini 35W/930 GX10 MR16 40D	39.1 W	87 V

Approval and Application

Order Code	Full Product Name	Mercury (Hg) Content (Max)	Mercury (Hg) Content (Nom)	Energy Consumption kWh/1000 h
928191005331	CDM-Rm Elite Mini 20W/830 GX10 MR16 10D	3.5 mg	3.5 mg	21 kWh
928191105331	CDM-Rm Elite Mini 20W/830 GX10 MR16 25D	3.5 mg	3.5 mg	21 kWh
928191205331	CDM-Rm Elite Mini 20W/830 GX10 MR16 40D	3.5 mg	3.5 mg	21 kWh
928194605330	CDM-Rm Elite Mini 35W/930 GX10 MR16 10D	4.7 mg	4.7 mg	40 kWh
928194705330	CDM-Rm Elite Mini 35W/930 GX10 MR16 25D	4.7 mg	4.7 mg	40 kWh
928194805330	CDM-Rm Elite Mini 35W/930 GX10 MR16 40D	4.7 mg	4.7 mg	40 kWh

© 2026 Signify Holding. All rights reserved. The information provided herein is subject to change, without notice. Signify does not give any representation or warranty as to the accuracy or completeness of the information included herein and shall not be liable for any action in reliance thereon. The information presented in this document is not intended as any commercial offer and does not form part of any quotation or contract, unless otherwise agreed by Signify. Philips and the Philips Shield Emblem are registered trademarks of Koninklijke Philips N.V.