PHILIPS

Flat Line

8931770

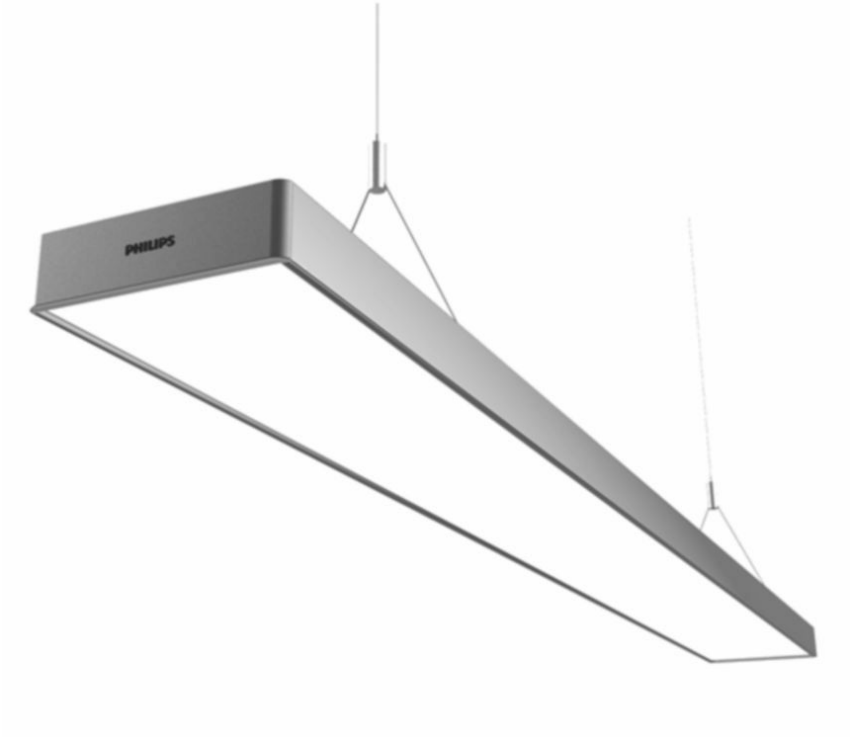

BOLD and Sleek: A humble profile with minimal bezel

The Falt line family of luminaires gives you compromise-free office illumination with the sleek bar profile. It is a perfect solution for office application and general indoor area lighting . The range brings together high-flux lighting with a homogeneous optical system without making any concessions on energy efficiency design

Benefits

- Optimized lighting for office space: smooth and comfortable
- Wider distribution allowing wider row spacing and hence reduction in connected load
- Dimmable and fixed output drivers
- Wider, Flatter, minimal bezel
- Sustainability coupled with comfortable ambience ; Options with CRI =90 and R9>50, SDCM<3
- Enhance Interiors

Applications

- Modern Workspaces
- Meeting and Conference room
- Institutions
- Community Centers

Features

- Superior efficacy of 120 lm/W
- Suitable for Standalone & Continuous Mounting
- Up-Down lighting distribution
- Uniform & volumetric light distribution
- Comfortable Light - CRI of 80 to ensure better color rendering.
- Minimum Bezel and height (33 mm for Down/ 45 Up-Down)
- Flexibility with NI Driver Options – Easy serviceability
- CRI90/R9>50 options, Indirect Lighting component, SDCM < 3
- Higher efficacy helps to earn points of WELL & LEED.

- Lifetime: 50,000 Hrs. @ Ta45^{0}C, BIS Approbation - Safe and Reliable performance
- THD<10% - Higher power factor, lower peak currents, and higher efficiency.
- Flicker Free Lighting Effects - New light platform and optical design with ripple < 5%
- Lighting solution with high uniformity provides comfort in office lighting experience.
- Connected ready(Dali/interact) versions available for Smart offices/workspaces
- Multiple Lumen Packs & CCT - For different office applications and mounting heights
- Meant for Indoor Application Only. Should not be used in outdoor environment.

Versions

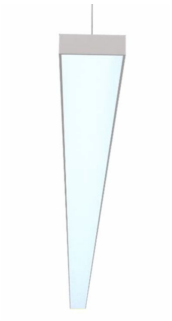

Falt line Up-Down

Dimensional drawing

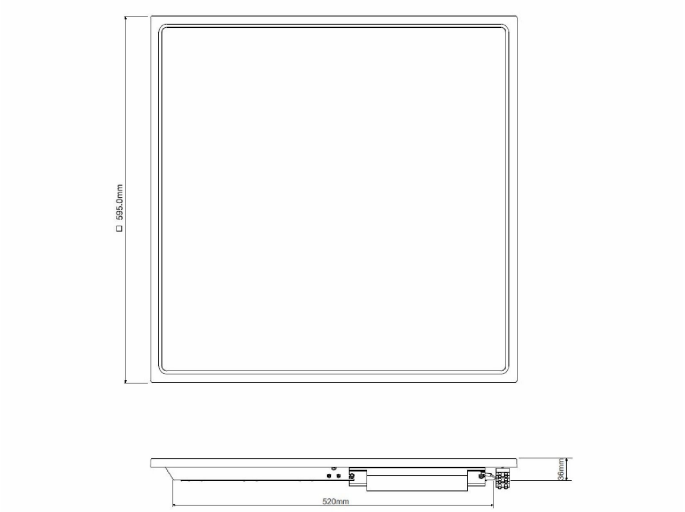

SP570X LED22S 4000 PSU W12L120 OD SI

General Information

Driver included	Yes

Light Technical

Color rendering index (CRI)	>80
Beam angle of light source	- degree(s)
Optic type	-

Operating and Electrical

Input Voltage	220 to 240 V
Protection class IEC	Safety class I

Mechanical and Housing

Housing Color	Silver
Ingress protection code	IP20 [Finger-protected]
Mech. impact protection code	IK02 [0.2 J standard]

Approval and Application

Flammability mark	For mounting on normally flammable surfaces
Ambient temperature range	0 to +45 °C

Initial Performance (IEC Compliant)

Initial chromaticity	<5

Light Technical

Order Code	Full Product Name	Upward light output ratio	Luminous Flux	Correlated Color Temperature (Nom)	Luminous Efficacy (rated) (Nom)
919515814775	SP570P LED26S 4000 PSU W12L120 OD SI	0	2,600 lm	4000 K	120 lm/W
919515814776	SP570P LED26S 6500 PSU W12L120 OD SI	0	2,600 lm	6500 K	120 lm/W
919515814777	SP570P LED26S 4000 PSD W12L120 OD SI	0	2,600 lm	6500 K	120 lm/W
919515814778	SP570P LED26S 6500 PSD W12L120 OD SI	0	2,600 lm	6500 K	120 lm/W
919515814779	SP570X LED22S 4000 PSU W12L120 OD SI	0	2,200 lm	6500 K	120 lm/W
919515814780	SP570X LED22S 6500 PSU W12L120 OD SI	0	2,200 lm	6500 K	120 lm/W
919515814781	SP570X LED22S 4000 PSD W12L120 OD SI	0	2,200 lm	6500 K	120 lm/W
919515814782	SP570X LED22S 6500 PSD W12L120 OD SI	0	2,200 lm	6500 K	120 lm/W
919515814783	SP570P LED26S 4000 PSU W12L120 OC SI	0	2,600 lm	6500 K	115 lm/W
919515814784	SP570P LED26S 6500 PSU W12L120 OC SI	0	2,600 lm	6500 K	115 lm/W
919515814785	SP570P LED26S 4000 PSD W12L120 OC SI	0	2,600 lm	6500 K	115 lm/W
919515814786	SP570P LED26S 6500 PSD W12L120 OC SI	0	2,600 lm	6500 K	115 lm/W
919515814787	SP570X LED22S 4000 PSU W12L120 OC SI	0	2,200 lm	6500 K	115 lm/W
919515814788	SP570X LED22S 6500 PSU W12L120 OC SI	0	2,200 lm	6500 K	115 lm/W
919515814789	SP570X LED22S 4000 PSD W12L120 OC SI	0	2,200 lm	6500 K	115 lm/W
919515814790	SP570X LED22S 6500 PSD W12L120 OC SI	0	2,200 lm	6500 K	115 lm/W
919515814791	SP571P LED33S 4000 PSU W12L120 OD SI	0.33	3,300 lm	6500 K	120 lm/W
919515814792	SP571P LED33S 6500 PSU W12L120 OD SI	0.33	3,300 lm	6500 K	120 lm/W
919515814793	SP571P LED33S 4000 PSD W12L120 OD SI	0.33	3,300 lm	6500 K	120 lm/W
919515814794	SP571P LED33S 6500 PSD W12L120 OD SI	0.33	3,300 lm	6500 K	120 lm/W
919515814795	SP571X LED27S 4000 PSU W12L120 OD SI	0.33	2,700 lm	6500 K	120 lm/W

Order Code	Full Product Name	Upward light output ratio	Luminous Flux	Correlated Color Temperature (Nom)	Luminous Efficacy (rated) (Nom)
919515814796	SP571X LED27S 6500 PSU W12L120 OD SI	0.33	2,700 lm	6500 K	120 lm/W
919515814797	SP571X LED27S 4000 PSD W12L120 OD SI	0.33	2,700 lm	6500 K	120 lm/W
919515814798	SP571X LED27S 6500 PSD W12L120 OD SI	0.33	2,700 lm	6500 K	120 lm/W
919515814799	SP571P LED33S 4000 PSU W12L120 OC SI	0.33	3,300 lm	6500 K	120 lm/W
919515814801	SP571P LED33S 6500 PSU W12L120 OC SI	0.33	3,300 lm	6500 K	120 lm/W
919515814802	SP571P LED33S 4000 PSD W12L120 OC SI	0.33	3,300 lm	6500 K	120 lm/W
919515814803	SP571P LED33S 6500 PSD W12L120 OC SI	0.33	3,300 lm	6500 K	120 lm/W
919515814804	SP571X LED27S 4000 PSU W12L120 OC SI	0.33	2,700 lm	6500 K	120 lm/W
919515814805	SP571X LED27S 6500 PSU W12L120 OC SI	0.33	2,700 lm	6500 K	120 lm/W
919515814806	SP571X LED27S 4000 PSD W12L120 OC SI	0.33	2,700 lm	6500 K	120 lm/W
919515814807	SP571X LED27S 6500 PSD W12L120 OC SI	0.33	2,700 lm	6500 K	120 lm/W
919515814808	SP570P LED52S 4000 PSU W12L240 OD SI	0	5,200 lm	6500 K	120 lm/W
919515814809	SP570P LED52S 6500 PSU W12L240 OD SI	0	5,200 lm	6500 K	120 lm/W
919515814810	SP570P LED52S 4000 PSD W12L240 OD SI	0	5,200 lm	6500 K	120 lm/W
919515814811	SP570P LED52S 6500 PSD W12L240 OD SI	0	5,200 lm	6500 K	120 lm/W
919515814812	SP570X LED44S 4000 PSU W12L240 OD SI	0	4,400 lm	6500 K	120 lm/W
919515814813	SP570X LED44S 6500 PSU W12L240 OD SI	0	4,400 lm	6500 K	120 lm/W
919515814814	SP570X LED44S 4000 PSD W12L240 OD SI	0	4,400 lm	6500 K	120 lm/W
919515814815	SP570X LED44S 6500 PSD W12L240 OD SI	0	4,400 lm	6500 K	120 lm/W
919515814816	SP570P LED52S 4000 PSU W12L240 OC SI	0	5,200 lm	6500 K	120 lm/W
919515814817	SP570P LED52S 6500 PSU W12L240 OC SI	0	5,200 lm	6500 K	120 lm/W
919515814818	SP570P LED52S 4000 PSD W12L240 OC SI	0	5,200 lm	6500 K	120 lm/W
919515814819	SP570P LED52S 6500 PSD W12L240 OC SI	0	5,200 lm	6500 K	120 lm/W
919515814820	SP570X LED44S 4000 PSU W12L240 OC SI	0	4,400 lm	6500 K	120 lm/W
919515814821	SP570X LED44S 6500 PSU W12L240 OC SI	0	4,400 lm	6500 K	120 lm/W
919515814822	SP570X LED44S 4000 PSD W12L240 OC SI	0	4,400 lm	6500 K	120 lm/W
919515814823	SP570X LED44S 6500 PSD W12L240 OC SI	0	4,400 lm	6500 K	120 lm/W
919515814824	SP571P LED66S 4000 PSU W12L240 OD SI	0.33	6,600 lm	6500 K	120 lm/W
919515814825	SP571P LED66S 6500 PSU W12L240 OD SI	0.33	6,600 lm	6500 K	120 lm/W
919515814826	SP571P LED66S 4000 PSD W12L240 OD SI	0.33	6,600 lm	6500 K	120 lm/W
919515814827	SP571P LED66S 6500 PSD W12L240 OD SI	0.33	6,600 lm	6500 K	120 lm/W
919515814828	SP571X LED54S 4000 PSU W12L240 OD SI	0.33	5,400 lm	6500 K	120 lm/W
919515814829	SP571X LED54S 6500 PSU W12L240 OD SI	0.33	5,400 lm	6500 K	120 lm/W
919515814830	SP571X LED54S 4000 PSD W12L240 OD SI	0.33	5,400 lm	6500 K	120 lm/W
919515814831	SP571X LED54S 6500 PSD W12L240 OD SI	0.33	5,400 lm	6500 K	120 lm/W
919515814832	SP571P LED66S 4000 PSU W12L240 OC SI	0.33	6,600 lm	6500 K	120 lm/W
919515814833	SP571P LED66S 6500 PSU W12L240 OC SI	0.33	6,600 lm	6500 K	120 lm/W
919515814834	SP571P LED66S 4000 PSD W12L240 OC SI	0.33	6,600 lm	6500 K	120 lm/W
919515814835	SP571P LED66S 6500 PSD W12L240 OC SI	0.33	6,600 lm	6500 K	120 lm/W
919515814836	SP571X LED54S 4000 PSU W12L240 OC SI	0.33	5,400 lm	6500 K	120 lm/W
919515814837	SP571X LED54S 6500 PSU W12L240 OC SI	0.33	5,400 lm	6500 K	120 lm/W
919515814838	SP571X LED54S 4000 PSD W12L240 OC SI	0.33	5,400 lm	6500 K	120 lm/W
919515814839	SP571X LED54S 6500 PSD W12L240 OC SI	0.33	5,400 lm	6500 K	120 lm/W

Operating and Electrical

Order Code	Full Product Name	Power Consumption
919515814775	SP570P LED26S 4000 PSU W12L120 OD SI	22 W
919515814776	SP570P LED26S 6500 PSU W12L120 OD SI	22 W
919515814777	SP570P LED26S 4000 PSD W12L120 OD SI	22 W
919515814778	SP570P LED26S 6500 PSD W12L120 OD SI	22 W
919515814779	SP570X LED22S 4000 PSU W12L120 OD SI	19 W
919515814780	SP570X LED22S 6500 PSU W12L120 OD SI	19 W
919515814781	SP570X LED22S 4000 PSD W12L120 OD SI	19 W
919515814782	SP570X LED22S 6500 PSD W12L120 OD SI	19 W
919515814783	SP570P LED26S 4000 PSU W12L120 OC SI	23 W
919515814784	SP570P LED26S 6500 PSU W12L120 OC SI	23 W
919515814785	SP570P LED26S 4000 PSD W12L120 OC SI	23 W
919515814786	SP570P LED26S 6500 PSD W12L120 OC SI	23 W
919515814787	SP570X LED22S 4000 PSU W12L120 OC SI	19 W
919515814788	SP570X LED22S 6500 PSU W12L120 OC SI	19 W
919515814789	SP570X LED22S 4000 PSD W12L120 OC SI	19 W
919515814790	SP570X LED22S 6500 PSD W12L120 OC SI	19 W
919515814791	SP571P LED33S 4000 PSU W12L120 OD SI	32 W
919515814792	SP571P LED33S 6500 PSU W12L120 OD SI	22 W
919515814793	SP571P LED33S 4000 PSD W12L120 OD SI	22 W
919515814794	SP571P LED33S 6500 PSD W12L120 OD SI	22 W
919515814795	SP571X LED27S 4000 PSU W12L120 OD SI	22 W
919515814796	SP571X LED27S 6500 PSU W12L120 OD SI	22 W
919515814797	SP571X LED27S 4000 PSD W12L120 OD SI	22 W
919515814798	SP571X LED27S 6500 PSD W12L120 OD SI	22 W
919515814799	SP571P LED33S 4000 PSU W12L120 OC SI	22 W
919515814801	SP571P LED33S 6500 PSU W12L120 OC SI	22 W
919515814802	SP571P LED33S 4000 PSD W12L120 OC SI	22 W
919515814803	SP571P LED33S 6500 PSD W12L120 OC SI	22 W
919515814804	SP571X LED27S 4000 PSU W12L120 OC SI	22 W
919515814805	SP571X LED27S 6500 PSU W12L120 OC SI	22 W
919515814806	SP571X LED27S 4000 PSD W12L120 OC SI	22 W
919515814807	SP571X LED27S 6500 PSD W12L120 OC SI	22 W
919515814808	SP570P LED52S 4000 PSU W12L240 OD SI	22 W
919515814809	SP570P LED52S 6500 PSU W12L240 OD SI	22 W
919515814810	SP570P LED52S 4000 PSD W12L240 OD SI	22 W
919515814811	SP570P LED52S 6500 PSD W12L240 OD SI	22 W
919515814812	SP570X LED44S 4000 PSU W12L240 OD SI	22 W
919515814813	SP570X LED44S 6500 PSU W12L240 OD SI	22 W
919515814814	SP570X LED44S 4000 PSD W12L240 OD SI	22 W
919515814815	SP570X LED44S 6500 PSD W12L240 OD SI	22 W
919515814816	SP570P LED52S 4000 PSU W12L240 OC SI	22 W

Order Code	Full Product Name	Power Consumption
919515814817	SP570P LED52S 6500 PSU W12L240 OC SI	22 W
919515814818	SP570P LED52S 4000 PSD W12L240 OC SI	22 W
919515814819	SP570P LED52S 6500 PSD W12L240 OC SI	22 W
919515814820	SP570X LED44S 4000 PSU W12L240 OC SI	22 W
919515814821	SP570X LED44S 6500 PSU W12L240 OC SI	22 W
919515814822	SP570X LED44S 4000 PSD W12L240 OC SI	22 W
919515814823	SP570X LED44S 6500 PSD W12L240 OC SI	22 W
919515814824	SP571P LED66S 4000 PSU W12L240 OD SI	22 W
919515814825	SP571P LED66S 6500 PSU W12L240 OD SI	22 W
919515814826	SP571P LED66S 4000 PSD W12L240 OD SI	22 W
919515814827	SP571P LED66S 6500 PSD W12L240 OD SI	22 W
919515814828	SP571X LED54S 4000 PSU W12L240 OD SI	22 W
919515814829	SP571X LED54S 6500 PSU W12L240 OD SI	22 W
919515814830	SP571X LED54S 4000 PSD W12L240 OD SI	22 W
919515814831	SP571X LED54S 6500 PSD W12L240 OD SI	22 W
919515814832	SP571P LED66S 4000 PSU W12L240 OC SI	22 W
919515814833	SP571P LED66S 6500 PSU W12L240 OC SI	22 W
919515814834	SP571P LED66S 4000 PSD W12L240 OC SI	22 W
919515814835	SP571P LED66S 6500 PSD W12L240 OC SI	22 W
919515814836	SP571X LED54S 4000 PSU W12L240 OC SI	22 W
919515814837	SP571X LED54S 6500 PSU W12L240 OC SI	22 W
919515814838	SP571X LED54S 4000 PSD W12L240 OC SI	22 W
919515814839	SP571X LED54S 6500 PSD W12L240 OC SI	22 W

Controls and Dimming

Order Code	Full Product Name	Dimmable
919515814775	SP570P LED26S 4000 PSU W12L120 OD SI	No
919515814776	SP570P LED26S 6500 PSU W12L120 OD SI	No
919515814777	SP570P LED26S 4000 PSD W12L120 OD SI	Yes
919515814778	SP570P LED26S 6500 PSD W12L120 OD SI	Yes
919515814779	SP570X LED22S 4000 PSU W12L120 OD SI	No
919515814780	SP570X LED22S 6500 PSU W12L120 OD SI	No
919515814781	SP570X LED22S 4000 PSD W12L120 OD SI	Yes
919515814782	SP570X LED22S 6500 PSD W12L120 OD SI	Yes
919515814783	SP570P LED26S 4000 PSU W12L120 OC SI	No
919515814784	SP570P LED26S 6500 PSU W12L120 OC SI	No
919515814785	SP570P LED26S 4000 PSD W12L120 OC SI	Yes
919515814786	SP570P LED26S 6500 PSD W12L120 OC SI	Yes
919515814787	SP570X LED22S 4000 PSU W12L120 OC SI	No
919515814788	SP570X LED22S 6500 PSU W12L120 OC SI	No
919515814789	SP570X LED22S 4000 PSD W12L120 OC SI	Yes

Order Code	Full Product Name	Dimmable
919515814790	SP570X LED22S 6500 PSD W12L120 OC SI	Yes
919515814791	SP571P LED33S 4000 PSU W12L120 OD SI	No
919515814792	SP571P LED33S 6500 PSU W12L120 OD SI	No
919515814793	SP571P LED33S 4000 PSD W12L120 OD SI	Yes
919515814794	SP571P LED33S 6500 PSD W12L120 OD SI	Yes
919515814795	SP571X LED27S 4000 PSU W12L120 OD SI	No
919515814796	SP571X LED27S 6500 PSU W12L120 OD SI	No
919515814797	SP571X LED27S 4000 PSD W12L120 OD SI	Yes
919515814798	SP571X LED27S 6500 PSD W12L120 OD SI	Yes
919515814799	SP571P LED33S 4000 PSU W12L120 OC SI	No
919515814801	SP571P LED33S 6500 PSU W12L120 OC SI	No
919515814802	SP571P LED33S 4000 PSD W12L120 OC SI	Yes
919515814803	SP571P LED33S 6500 PSD W12L120 OC SI	Yes
919515814804	SP571X LED27S 4000 PSU W12L120 OC SI	No
919515814805	SP571X LED27S 6500 PSU W12L120 OC SI	No
919515814806	SP571X LED27S 4000 PSD W12L120 OC SI	Yes
919515814807	SP571X LED27S 6500 PSD W12L120 OC SI	Yes
919515814808	SP570P LED52S 4000 PSU W12L240 OD SI	No
919515814809	SP570P LED52S 6500 PSU W12L240 OD SI	No
919515814810	SP570P LED52S 4000 PSD W12L240 OD SI	Yes
919515814811	SP570P LED52S 6500 PSD W12L240 OD SI	Yes
919515814812	SP570X LED44S 4000 PSU W12L240 OD SI	No
919515814813	SP570X LED44S 6500 PSU W12L240 OD SI	No
919515814814	SP570X LED44S 4000 PSD W12L240 OD SI	Yes
919515814815	SP570X LED44S 6500 PSD W12L240 OD SI	Yes
919515814816	SP570P LED52S 4000 PSU W12L240 OC SI	No
919515814817	SP570P LED52S 6500 PSU W12L240 OC SI	No
919515814818	SP570P LED52S 4000 PSD W12L240 OC SI	Yes
919515814819	SP570P LED52S 6500 PSD W12L240 OC SI	Yes
919515814820	SP570X LED44S 4000 PSU W12L240 OC SI	No
919515814821	SP570X LED44S 6500 PSU W12L240 OC SI	No
919515814822	SP570X LED44S 4000 PSD W12L240 OC SI	Yes
919515814823	SP570X LED44S 6500 PSD W12L240 OC SI	Yes
919515814824	SP571P LED66S 4000 PSU W12L240 OD SI	No
919515814825	SP571P LED66S 6500 PSU W12L240 OD SI	No
919515814826	SP571P LED66S 4000 PSD W12L240 OD SI	Yes
919515814827	SP571P LED66S 6500 PSD W12L240 OD SI	Yes
919515814828	SP571X LED54S 4000 PSU W12L240 OD SI	No
919515814829	SP571X LED54S 6500 PSU W12L240 OD SI	No
919515814830	SP571X LED54S 4000 PSD W12L240 OD SI	Yes
919515814831	SP571X LED54S 6500 PSD W12L240 OD SI	Yes
919515814832	SP571P LED66S 4000 PSU W12L240 OC SI	No

Order Code	Full Product Name	Dimmable
919515814833	SP571P LED66S 6500 PSU W12L240 OC SI	No
919515814834	SP571P LED66S 4000 PSD W12L240 OC SI	Yes
919515814835	SP571P LED66S 6500 PSD W12L240 OC SI	Yes
919515814836	SP571X LED54S 4000 PSU W12L240 OC SI	No
919515814837	SP571X LED54S 6500 PSU W12L240 OC SI	No
919515814838	SP571X LED54S 4000 PSD W12L240 OC SI	Yes
919515814839	SP571X LED54S 6500 PSD W12L240 OC SI	Yes

Mechanical and Housing

Order Code	Full Product Name	Optical cover type
919515814775	SP570P LED26S 4000 PSU W12L120 OD SI	Opal diffuser in polycarbonate cover
919515814776	SP570P LED26S 6500 PSU W12L120 OD SI	Opal diffuser in polycarbonate cover
919515814777	SP570P LED26S 4000 PSD W12L120 OD SI	Opal diffuser in polycarbonate cover
919515814778	SP570P LED26S 6500 PSD W12L120 OD SI	Opal diffuser in polycarbonate cover
919515814779	SP570X LED22S 4000 PSU W12L120 OD SI	Opal diffuser in polycarbonate cover
919515814780	SP570X LED22S 6500 PSU W12L120 OD SI	Opal diffuser in polycarbonate cover
919515814781	SP570X LED22S 4000 PSD W12L120 OD SI	Opal diffuser in polycarbonate cover
919515814782	SP570X LED22S 6500 PSD W12L120 OD SI	Opal diffuser in polycarbonate cover
919515814783	SP570P LED26S 4000 PSU W12L120 OC SI	Opal prismatic cover
919515814784	SP570P LED26S 6500 PSU W12L120 OC SI	Opal prismatic cover
919515814785	SP570P LED26S 4000 PSD W12L120 OC SI	Opal prismatic cover
919515814786	SP570P LED26S 6500 PSD W12L120 OC SI	Opal prismatic cover
919515814787	SP570X LED22S 4000 PSU W12L120 OC SI	Opal prismatic cover
919515814788	SP570X LED22S 6500 PSU W12L120 OC SI	Opal prismatic cover
919515814789	SP570X LED22S 4000 PSD W12L120 OC SI	Opal prismatic cover
919515814790	SP570X LED22S 6500 PSD W12L120 OC SI	Opal prismatic cover
919515814791	SP571P LED33S 4000 PSU W12L120 OD SI	Opal diffuser in polycarbonate cover
919515814792	SP571P LED33S 6500 PSU W12L120 OD SI	Opal diffuser in polycarbonate cover
919515814793	SP571P LED33S 4000 PSD W12L120 OD SI	Opal diffuser in polycarbonate cover
919515814794	SP571P LED33S 6500 PSD W12L120 OD SI	Opal diffuser in polycarbonate cover
919515814795	SP571X LED27S 4000 PSU W12L120 OD SI	Opal diffuser in polycarbonate cover
919515814796	SP571X LED27S 6500 PSU W12L120 OD SI	Opal diffuser in polycarbonate cover
919515814797	SP571X LED27S 4000 PSD W12L120 OD SI	Opal diffuser in polycarbonate cover
919515814798	SP571X LED27S 6500 PSD W12L120 OD SI	Opal diffuser in polycarbonate cover
919515814799	SP571P LED33S 4000 PSU W12L120 OC SI	Opal prismatic cover
919515814801	SP571P LED33S 6500 PSU W12L120 OC SI	Opal prismatic cover
919515814802	SP571P LED33S 4000 PSD W12L120 OC SI	Opal prismatic cover
919515814803	SP571P LED33S 6500 PSD W12L120 OC SI	Opal prismatic cover
919515814804	SP571X LED27S 4000 PSU W12L120 OC SI	Opal prismatic cover
919515814805	SP571X LED27S 6500 PSU W12L120 OC SI	Opal prismatic cover
919515814806	SP571X LED27S 4000 PSD W12L120 OC SI	Opal prismatic cover

Order Code	Full Product Name	Optical cover type
919515814807	SP571X LED27S 6500 PSD W12L120 OC SI	Opal prismatic cover
919515814808	SP570P LED52S 4000 PSU W12L240 OD SI	Opal diffuser in polycarbonate cover
919515814809	SP570P LED52S 6500 PSU W12L240 OD SI	Opal diffuser in polycarbonate cover
919515814810	SP570P LED52S 4000 PSD W12L240 OD SI	Opal diffuser in polycarbonate cover
919515814811	SP570P LED52S 6500 PSD W12L240 OD SI	Opal diffuser in polycarbonate cover
919515814812	SP570X LED44S 4000 PSU W12L240 OD SI	Opal diffuser in polycarbonate cover
919515814813	SP570X LED44S 6500 PSU W12L240 OD SI	Opal diffuser in polycarbonate cover
919515814814	SP570X LED44S 4000 PSD W12L240 OD SI	Opal diffuser in polycarbonate cover
919515814815	SP570X LED44S 6500 PSD W12L240 OD SI	Opal diffuser in polycarbonate cover
919515814816	SP570P LED52S 4000 PSU W12L240 OC SI	Opal prismatic cover
919515814817	SP570P LED52S 6500 PSU W12L240 OC SI	Opal prismatic cover
919515814818	SP570P LED52S 4000 PSD W12L240 OC SI	Opal prismatic cover
919515814819	SP570P LED52S 6500 PSD W12L240 OC SI	Opal prismatic cover
919515814820	SP570X LED44S 4000 PSU W12L240 OC SI	Opal prismatic cover
919515814821	SP570X LED44S 6500 PSU W12L240 OC SI	Opal prismatic cover
919515814822	SP570X LED44S 4000 PSD W12L240 OC SI	Opal prismatic cover
919515814823	SP570X LED44S 6500 PSD W12L240 OC SI	Opal prismatic cover
919515814824	SP571P LED66S 4000 PSU W12L240 OD SI	Opal diffuser in polycarbonate cover
919515814825	SP571P LED66S 6500 PSU W12L240 OD SI	Opal diffuser in polycarbonate cover
919515814826	SP571P LED66S 4000 PSD W12L240 OD SI	Opal diffuser in polycarbonate cover
919515814827	SP571P LED66S 6500 PSD W12L240 OD SI	Opal diffuser in polycarbonate cover
919515814828	SP571X LED54S 4000 PSU W12L240 OD SI	Opal diffuser in polycarbonate cover
919515814829	SP571X LED54S 6500 PSU W12L240 OD SI	Opal diffuser in polycarbonate cover
919515814830	SP571X LED54S 4000 PSD W12L240 OD SI	Opal diffuser in polycarbonate cover
919515814831	SP571X LED54S 6500 PSD W12L240 OD SI	Opal diffuser in polycarbonate cover
919515814832	SP571P LED66S 4000 PSU W12L240 OC SI	Opal prismatic cover
919515814833	SP571P LED66S 6500 PSU W12L240 OC SI	Opal prismatic cover
919515814834	SP571P LED66S 4000 PSD W12L240 OC SI	Opal prismatic cover
919515814835	SP571P LED66S 6500 PSD W12L240 OC SI	Opal prismatic cover
919515814836	SP571X LED54S 4000 PSU W12L240 OC SI	Opal prismatic cover
919515814837	SP571X LED54S 6500 PSU W12L240 OC SI	Opal prismatic cover
919515814838	SP571X LED54S 4000 PSD W12L240 OC SI	Opal prismatic cover
919515814839	SP571X LED54S 6500 PSD W12L240 OC SI	Opal prismatic cover

© 2026 Signify Holding. All rights reserved. The information provided herein is subject to change, without notice. Signify does not give any representation or warranty as to the accuracy or completeness of the information included herein and shall not be liable for any action in reliance thereon. The information presented in this document is not intended as any commercial offer and does not form part of any quotation or contract, unless otherwise agreed by Signify. Philips and the Philips Shield Emblem are registered trademarks of Koninklijke Philips N.V.