PHILIPS

HID-HeavyDuty BHL for HPL/HPI

DHDHP

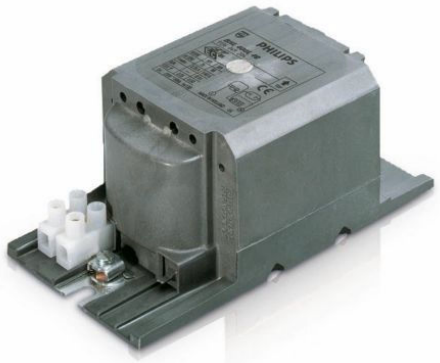

Long-lasting, reliable solution

Encapsulated electromagnetic copper/iron ballasts for HPL, HPI (Plus) and SON-H lamps

Benefits

- Excellent resistance to chemical impact, humid conditions and environmental stress crack
- Long-lasting reliable solution – outstanding product lifetime of 15 years average
- Minimal watt losses thanks to orthocyclic winding process
- Control gear can be installed remotely

Applications

- Outdoor lighting

Features

- Encapsulated with thermoplastic polyester resin, reinforced with glass fiber
- Ballasts designed for mercury lamps (HPL) without using an ignitor can also be used with HPI lamps together with an ignitor
- Equipped with screw terminal blocks as standard; insert contacts available upon request
- Ballasts for alternative mains voltages/frequencies available upon request
- Separate earth terminal (HID 'Heavy Duty')

Versions

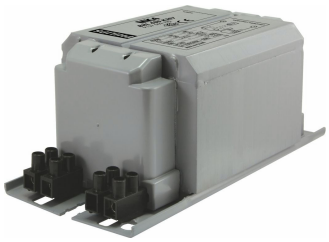

GPPR_BHL-HD_0001-Product photo

Dimensional drawing

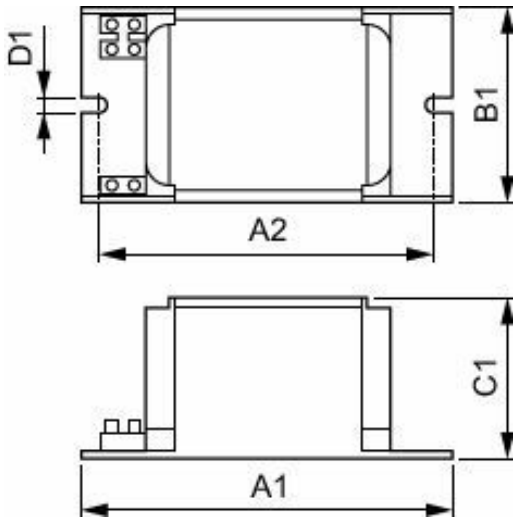

Product	D1	C1	A1	A2	B1
BHL 250 L40-A2 230V 50Hz HD2-126	6.2 mm	66.0 mm	126.0 mm	107.5 mm	81.0 mm
BHL 400 L40-A2 230V 50Hz HD2-151	6.2 mm	66.0 mm	151.0 mm	132.5 mm	81.0 mm

Operating and Electrical

Input Voltage	230 V
Line Frequency	50 Hz
Input Frequency	50 Hz

© 2026 Signify Holding. All rights reserved. The information provided herein is subject to change, without notice. Signify does not give any representation or warranty as to the accuracy or completeness of the information included herein and shall not be liable for any action in reliance thereon. The information presented in this document is not intended as any commercial offer and does not form part of any quotation or contract, unless otherwise agreed by Signify. Philips and the Philips Shield Emblem are registered trademarks of Koninklijke Philips N.V.