PHILIPS

DynaVision Programmable Xtreme for CDMe

DDVPXCDM



Xtreme drivers for maximum energy savings

Highly reliable and flexible electronic drivers for MASTERColour CDMe MW lamps; designed to save on energy costs via integrated controls and to reduce maintenance costs thanks to 80,000 hour lifetime and integrated lightning protection. The DynaVision Programmable product family is the perfect basis for any sort of lighting management solution.

Benefits

- Most efficient white-light system in the industry in its power range
- Designed to minimize maintenance cost in outdoor lighting
- No down-time due to calamities (storms, lightning strikes, etc.)
- Same energy consumption and smooth driving of the lamp regardless of fluctuations in the mains voltage

Applications

- High-bay retail
- Floodlighting
- Area and road lighting
- Offices and industry

Features

- Programmable by means of standard digital interface (DALI) and controllable via DALI protocol
- Integrates control options (DynaDimmer)
- Longest lifetime for electronic driver: 80,000 hours with minimum 90% survival at Tc = 80 °C
- Lightning protection 10 kV/5 kA
- Accurate lamp power stabilization of 95-97% over wide mains-voltage range of 180-300 V

Versions



GPPR IDVLSCPO 0004

Dimensional drawing

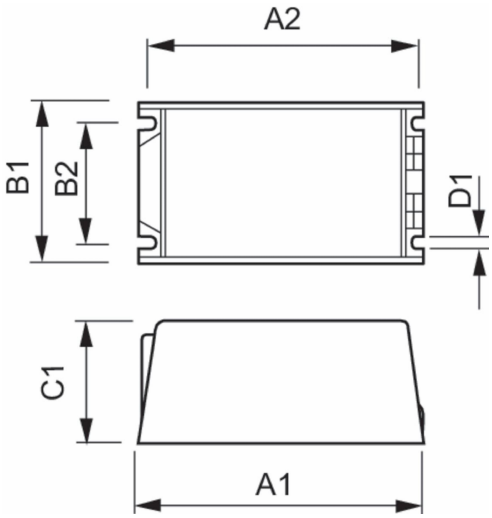

Product	D1	C1	A1	A2	B1	B2
HID-DV PROG Xt 210 CDMe/CPO C2 208-277V	4.8 mm	58.0 mm	169.0 mm	156.0 mm	100.0 mm	81.5 mm

Operating and Electrical

Input Voltage	208-240-277 V
Line Frequency	50 to 60 Hz
Input Frequency	50 to 60 Hz
Number of Products on MCB (16A Type B) (Nom)	13

Mechanical and Housing

Housing	C2

© 2026 Signify Holding. All rights reserved. The information provided herein is subject to change, without notice. Signify does not give any representation or warranty as to the accuracy or completeness of the information included herein and shall not be liable for any action in reliance thereon. The information presented in this document is not intended as any commercial offer and does not form part of any quotation or contract, unless otherwise agreed by Signify. Philips and the Philips Shield Emblem are registered trademarks of Koninklijke Philips N.V.