PHILIPS

DL252 G2 SF SQ LED 1300 65K 18W 8" WV

929002636001



External Slim Downlight DL252, 18 W, 1300 lm, 6500 K, Wide beam, White

Metal, White, Power supply unit (On/Off), 1300 lm, 18 W, 72.00 lm/W, 6500 K, (0.313, 0.337) <6, Wide beam, Matte, Polypropylene, IP20 | Finger-protected, IK01 | 0.15 J, Safety class II, Connection unit 2-pole

General Information

Light source replaceable	No
Number of gear units	1 unit
Driver included	Yes
Nominal lifetime	25,000 hour(s)
Switching Cycle	12,500
Lighting Technology	LED
Warranty period	1 years

Light Technical

Luminous Flux	1,300 lm
Correlated Color Temperature (Nom)	6500 K
Luminous Efficacy (rated) (Nom)	72.00 lm/W
Color rendering index (CRI)	80
Light source color	865 cool daylight
Optic type	Wide beam
Luminaire light beam spread	110°

Operating and Electrical

Input Voltage	110 to 240 V
Line Frequency	50 or 60 Hz

Input Frequency	50 or 60 Hz
Inrush current	44 A
Inrush time	0.13 ms
Power Consumption	18 W
Power Factor (Fraction)	0.5
Connection	Connection unit 2-pole
Cable	Cable 0.2 m without plug
Number of products on MCB of 16 A type B	34
Suitable for random switching	No
Protection class IEC	Safety class II

Controls and Dimming

Dimmable	No
Driver/power unit/transformer	Power supply unit (On/Off)
Constant light output	No

Mechanical and Housing

Housing Material	Metal
Reflector material	-
Optic material	Polystyrene
Optical cover material	Polypropylene
Fixation material	Steel
Housing Color	White
Optical cover finish	Matte
Overall length	210 mm
Overall width	210 mm
Overall height	28 mm
Overall diameter	210 mm
Dimensions (Height x Width x Depth)	28 x 210 x 210 mm
Net weight	0.512 kg
Ingress protection code	IP20 [Finger-protected]
Mech. impact protection code	IK01 [0.15 J]
Net Weight (Piece)	0.512 kg

Approval and Application

Glow-wire test	Temperature 650 °C, duration 30 s
Flammability mark	For mounting on normally flammable surfaces
EU RoHS compliant	Yes
Warranty	2 year(s)
EyeComfort	Yes
Ambient temperature range	-20 to +40 °C

Initial Performance (IEC Compliant)

Luminous flux tolerance	+10%/-15%
Initial chromaticity	(0.313, 0.337) <6
Power consumption tolerance	+10%/-20%

Over Time Performance (IEC Compliant)

Driver failure rate at 5000 h	0.05 %
Median useful life L70B50	25,000 hour(s)

Product Data

Order product name	DL252 G2 SF SQ LED 1300 65K 18W 8" WV
Full product name	DL252 G2 SF SQ LED 1300 65K 18W 8" WV
Full product code	871869974909500
Order code	929002636001
Material Nr. (12NC)	929002636001
Numerator - Quantity Per Pack	1
EAN/UPC - Product/Case	8718699749095
Numerator - Packs per outer box	12
EAN/UPC - Case	8718699749101

Dimensional drawing

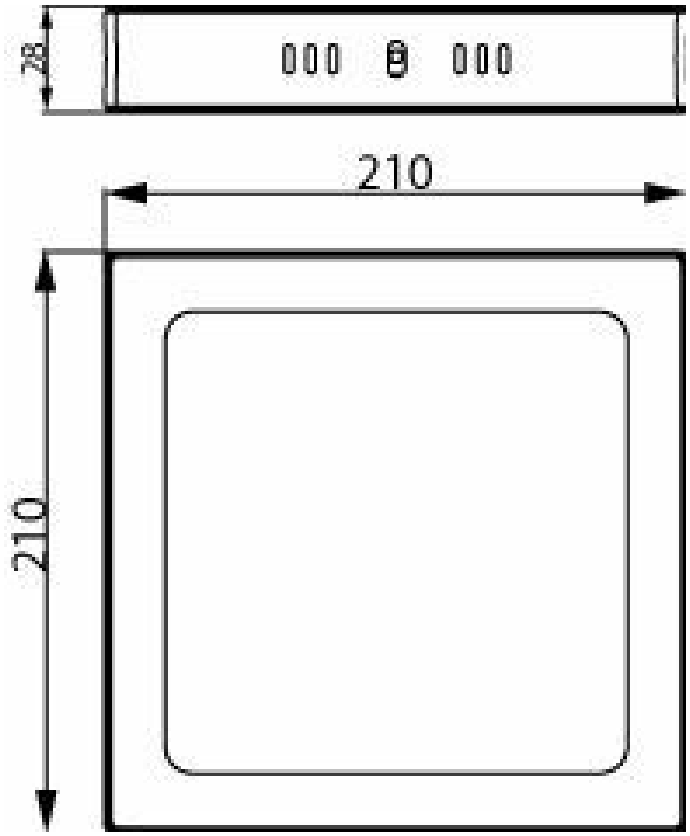

Photometric data

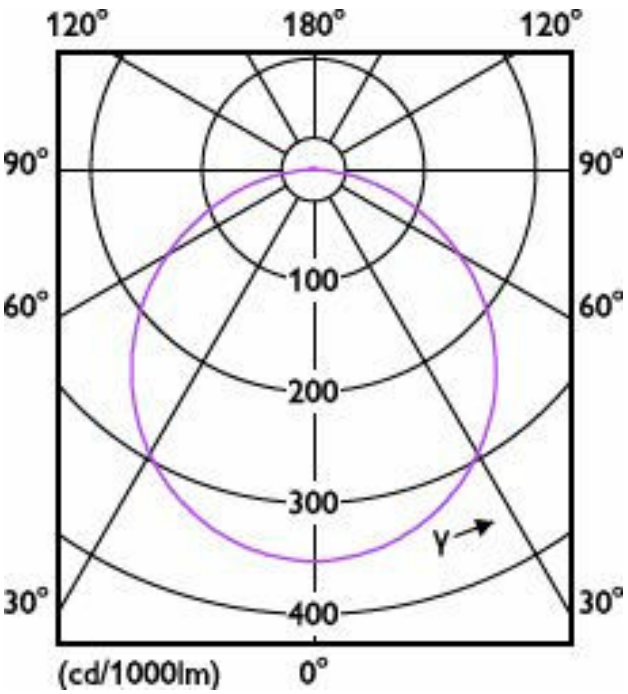

Light Distribution Diagram - DL252 G2 SF SQ LED 1300 65K 18W 8" WV

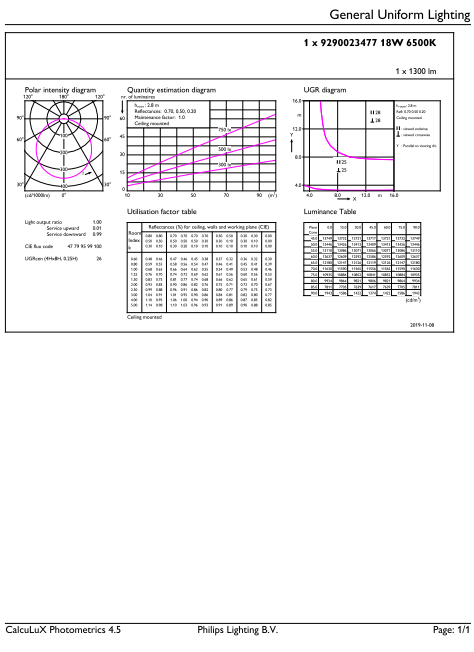

General uniform lighting - DL252 G2 SF SQ LED 1300 65K 18W 8" WV

Lifetime

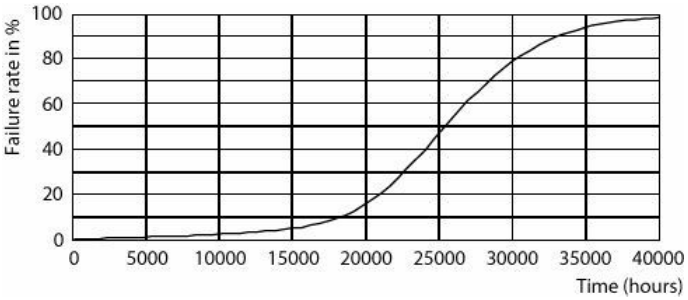

L70B-50 25K-LED

Related Documents

Documents and certificates	Document Name	Download
Environmental Product Declaration	Philips-RETRO-RETRO-Ref-929003259533-EPD.pdf	Download

Photometry and lighting design	Document Name	Download
IES File	Downlight_DL252_G2_LED_SF_SQ_1300lm_65K-IES.ies	Download

© 2026 Signify Holding. All rights reserved. The information provided herein is subject to change, without notice. Signify does not give any representation or warranty as to the accuracy or completeness of the information included herein and shall not be liable for any action in reliance thereon. The information presented in this document is not intended as any commercial offer and does not form part of any quotation or contract, unless otherwise agreed by Signify. Philips and the Philips Shield Emblem are registered trademarks of Koninklijke Philips N.V.