Signify

Copenhagen City Comfort LED large

BDS862



Copenhagen City Comfort LED large: designed to ensure the highest comfort in inner city environments

The original Copenhagen luminaire was co-designed with Copenhagen's Office of City Architecture in the 1960s. This timeless luminaire design comes in three types: Copenhagen LED gen2, which delivers high performance for road lighting applications; Copenhagen City LED gen2, which is for city and residential areas where balanced light comfort and cohesive design language are appreciated; Copenhagen City Comfort LED, which caters to the needs of sensitive inner-city areas with high demand for spill light control and high comfort. The Copenhagen City Comfort LED version (BRS862) is ideal for inner-city and residential environments where very high lighting comfort is needed. The solution creates a pleasant and comfortable atmosphere for residents. The Copenhagen City Xtra Comfort LED version (BRS962) takes it a step further, providing even more spill light control in extra sensitive areas.

This means that residents in these areas can enjoy the benefits of functional lighting without being bothered by excessive light pollution. Overall, Copenhagen City Comfort LED and Xtra Comfort LED options contribute to a more livable city. Thanks to the built-in LEDGINE-O engine and the wide range of application-tailored optics, Copenhagen City Comfort LED luminaires deliver the right amount of light and in the right direction on your street, enabling important energy savings and reducing light pollution in the surrounding areas. The luminaire is available with one or two Zhaga-D4i (ZD4i) system-ready sockets, which makes the luminaire future-ready, ready to pair with advanced control and lighting software applications such as Interact. Due to the plastic material usage, the top socket can be integrated into the canopy without impacting the clean design of the luminaire. Furthermore, every Copenhagen City Comfort LED luminaire is uniquely identifiable thanks to the Signify Service tag app. By simply scanning a QR code placed inside the door of the mast or directly on the luminaire, you can instantly access the configuration of the luminaire.

Benefits

- Pleasant and comfortable atmosphere for residents by offering very high optical comfort without glare
- Reduced amount of light pollution through better spill light control
- Unique aesthetic design with recessed LED integration and hidden top Zhaga-D4i sockets
- City branding possibilities through static and dynamic uplight options in a choice of colors
- Future-ready with Zhaga-D4i sockets to connect with Interact controls and sensors
- Easy installation and maintenance enabled by Service tag

Applications

- Inner city residential streets
- Narrow city streets
- Inner city open areas
- Pedestrian streets
- Smaller shopping streets

Features

- No light emitted above 70 degree angle (Copenhagen City Xtra Comfort LED)
- Choice of color temperatures and color rendering for different ambiences: 2200K, 2700K, 3000K and 4000K
- Multiple mounting options: side entry, suspended, center 3/4” thread
- Marine salt protection
- 5-year standard warranty

Versions



Copenhagen CityXtra Comfort large with suspended fixation



Copenhagen City Comfort large with center 3/4"thread fixation



Copenhagen City Comfort large with side entry fixation



Copenhagen City Comfort large with suspended fixation



Copenhagen City Xtra Comfort large with center 3/4"thread fixation



Copenhagen City Xtra Comfort large with side entry fixation

Dimensional drawing

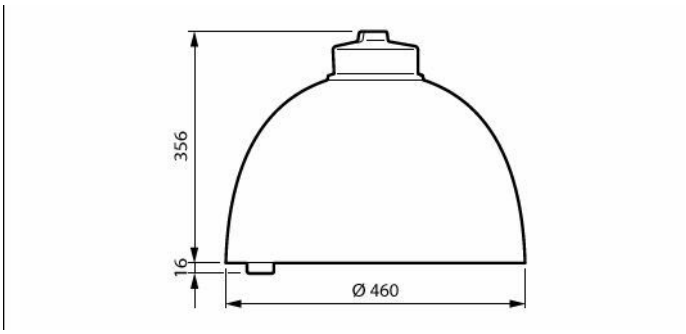

BDS962 LED120/740 II MDW 9005 CLOSRTB 10

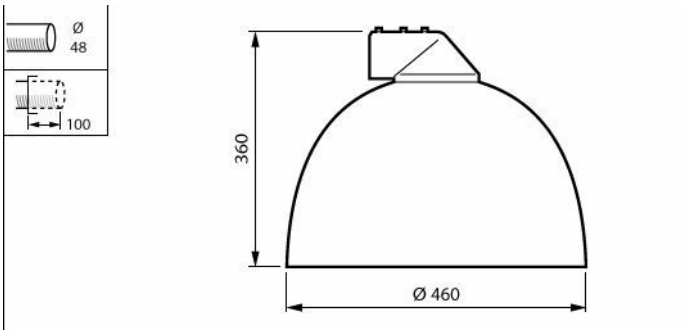

BRS962 LED60/830 II MDWLOR 9005 DDF12 10

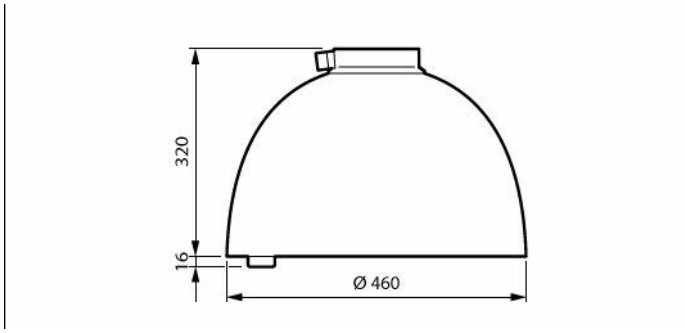

BSS862 LED100/830 II MDW GR CLO SRTB 10

Product details



Copenhagen City Comfort LED large



Copenhagen City Xtra Comfort LED large



Recessed LED board in Copenhagen City Comfort LED large



Recessed LED board in Copenhagen City Xtra Comfort LED large

General Information

Number of gear units	1 unit
Driver included	Yes
Service tag	Yes

Light Technical

Luminaire light beam spread	-
Optic type outdoor	Distribution wide

Operating and Electrical

Surge Protection (Common/ Differential)	Surge protection level until 6 kV differential mode and 10 kV common mode

Controls and Dimming

Dimmable	Yes

Mechanical and Housing

Ingress protection code	IP66 [Dust penetration-protected, jet-proof]
Mech. impact protection code	IK07 [2 J reinforced]
Standard tilt angle posttop	0°
Standard tilt angle side entry	0°
Optical cover type	Polycarbonate

Emergency Operation

Central Emergency	Yes

Approval and Application

Flammability mark	-
CE mark	Yes

General Information

Order Code	Full Product Name	Lamp family code
919008639064	BSS962 LED100/830 II MDW GR CLO SRTB 10	LED100
919008639062	BDS862 LED120/740 II MDW GW CLO SRTB 10	LED120
919008639060	BRS862 LED60/830 II MDW LOR GW DDF12 10	LED60
919008639061	BSS862 LED100/830 II MDW GR CLO SRTB 10	LED100
919008639065	BDS962 LED120/740 II MDW 9005 CLOSRTB 10	LED120
919008639063	BRS962 LED60/830 II MDWLOR 9005 DDF12 10	LED60

Light Technical

Order Code	Full Product Name	Upward light output ratio	Luminous Flux	Correlated Color Temperature (Nom)	Color rendering index (CRI)	Light source color
919008639064	BSS962 LED100/830 II MDW GR CLO SRTB 10	0	9,476 lm	3000 K	80	830 warm white
919008639062	BDS862 LED120/740 II MDW GW CLO SRTB 10	0.5	11,399 lm	4000 K	70	740 neutral white
919008639060	BRS862 LED60/830 II MDW LOR GW DDF12 10	0.5	5,935 lm	3000 K	80	830 warm white
919008639061	BSS862 LED100/830 II MDW GR CLO SRTB 10	0	9,476 lm	3000 K	80	830 warm white
919008639065	BDS962 LED120/740 II MDW 9005 CLOSRTB 10	0	11,399 lm	4000 K	70	740 neutral white
919008639063	BRS962 LED60/830 II MDWLOR 9005 DDF12 10	0	5,935 lm	3000 K	80	830 warm white

Operating and Electrical

Order Code	Full Product Name	Power Consumption
919008639064	BSS962 LED100/830 II MDW GR CLO SRTB 10	74 W
919008639062	BDS862 LED120/740 II MDW GW CLO SRTB 10	69 W
919008639060	BRS862 LED60/830 II MDW LOR GW DDF12 10	45 W
919008639061	BSS862 LED100/830 II MDW GR CLO SRTB 10	74 W
919008639065	BDS962 LED120/740 II MDW 9005 CLOSRTB 10	69 W
919008639063	BRS962 LED60/830 II MDWLOR 9005 DDF12 10	45 W

Controls and Dimming

Order Code	Full Product Name	Maximum dim level
919008639064	BSS962 LED100/830 II MDW GR CLO SRTB 10	25%
919008639062	BDS862 LED120/740 II MDW GW CLO SRTB 10	25%
919008639060	BRS862 LED60/830 II MDW LOR GW DDF12 10	20%
919008639061	BSS862 LED100/830 II MDW GR CLO SRTB 10	25%
919008639065	BDS962 LED120/740 II MDW 9005 CLOSRTB 10	25%
919008639063	BRS962 LED60/830 II MDWLOR 9005 DDF12 10	20%

Mechanical and Housing

Order Code	Full Product Name	Housing Color
919008639064	BSS962 LED100/830 II MDW GR CLO SRTB 10	Gray
919008639062	BDS862 LED120/740 II MDW GW CLO SRTB 10	Housing Glow, bracket RAL 9007
919008639060	BRS862 LED60/830 II MDW LOR GW DDF12 10	Housing Glow, bracket RAL 9007
919008639061	BSS862 LED100/830 II MDW GR CLO SRTB 10	Gray
919008639065	BDS962 LED120/740 II MDW 9005 CLOSRTB 10	Black
919008639063	BRS962 LED60/830 II MDWLOR 9005 DDF12 10	Black

Product Data

Order Code	Full Product Name	Product family code
919008639064	BSS962 LED100/830 II MDW GR CLO SRTB 10	BSS962
919008639062	BDS862 LED120/740 II MDW GW CLO SRTB 10	BDS862
919008639060	BRS862 LED60/830 II MDW LOR GW DDF12 10	BRS862
919008639061	BSS862 LED100/830 II MDW GR CLO SRTB 10	BSS862
919008639065	BDS962 LED120/740 II MDW 9005 CLOSRTB 10	BDS962
919008639063	BRS962 LED60/830 II MDWLOR 9005 DDF12 10	BRS962

Polar normal diagrams

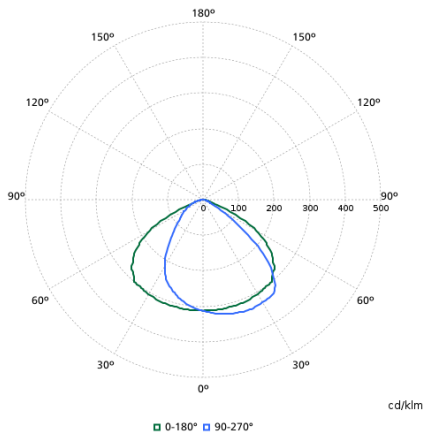

BDS862 LED120/740 II MDW GW CLO SRTB 10 919008639062

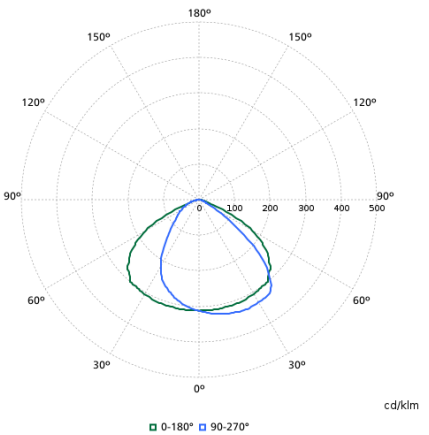

BSS862 LED100/830 II MDW GR CLO SRTB 10 919008639061

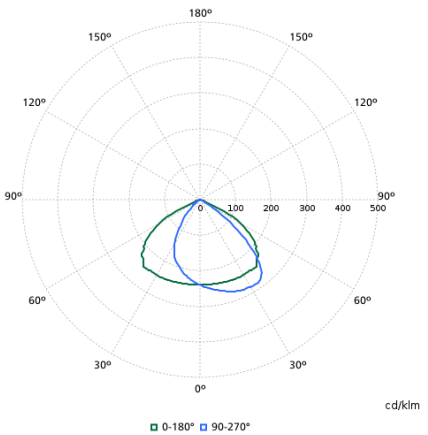

BSS962 LED100/830 II MDW GR CLO SRTB 10 919008639064

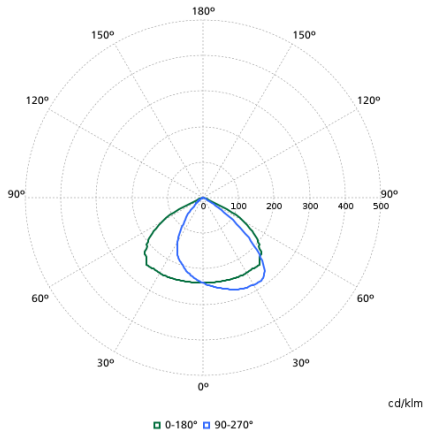

BDS962 LED120/740 II MDW 9005
CLOSRTB 10 919008639065

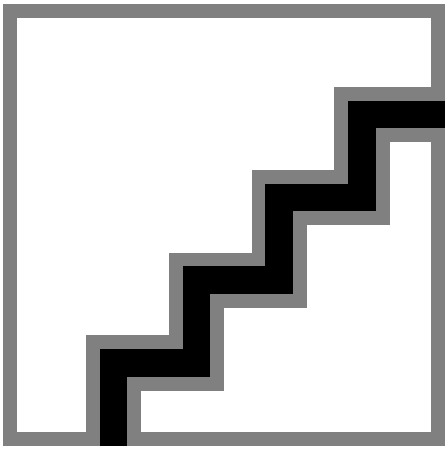

BRS962 LED60/830 II MDWLOR 9005
DDF12 10 919008639063

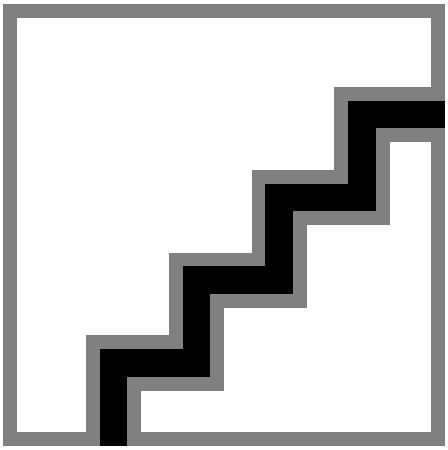

BRS862 LED60/830 II MDW LOR GW
DDF12 10 919008639060

© 2026 Signify Holding. All rights reserved. The information provided herein is subject to change, without notice. Signify does not give any representation or warranty as to the accuracy or completeness of the information included herein and shall not be liable for any action in reliance thereon. The information presented in this document is not intended as any commercial offer and does not form part of any quotation or contract, unless otherwise agreed by Signify. All trademarks are owned by Signify Holding or their respective owners.