PHILIPS

DynaVision Programmable Xtreme for CDO

DDVPXCDO



Xtreme drivers for maximum energy savings

Highly reliable and flexible electronic drivers for CDO lamps; designed to save on energy costs via integrated controls and to reduce maintenance costs thanks to 80,000 hour lifetime and integrated lightning protection. The DynaVision Programmable product family is the perfect basis for any sort of lighting management solution.

Benefits

- Enables 2-way communication with the lighting network (via DALI)
- Up to 40% energy saving due to the integrated dimming options and very high driver efficiency
- Minimizes maintenance cost due to the Xtreme lifetime of 80,000 hours and integrated lightning protection

Applications

- Road lighting
- Residential lighting
- City beautification

Features

- Programmable by means of standard digital interface (DALI) and controllable via DALI protocol
- Integrates several control options (DynaDimmer, LineSwitch, AmpDim, Constant Light Output, Adjustable Light Output)
- Longest lifetime for electronic drivers: 80,000 hours with minimum 90% survival at Tc = 80 °C
- Lightning protection 10 kV/5 kA
- Accurate lamp power stabilization of 95-97% over wide mains-voltage range of 180-300 V

Versions



GPPR IDVXtCDO 0001

Dimensional drawing

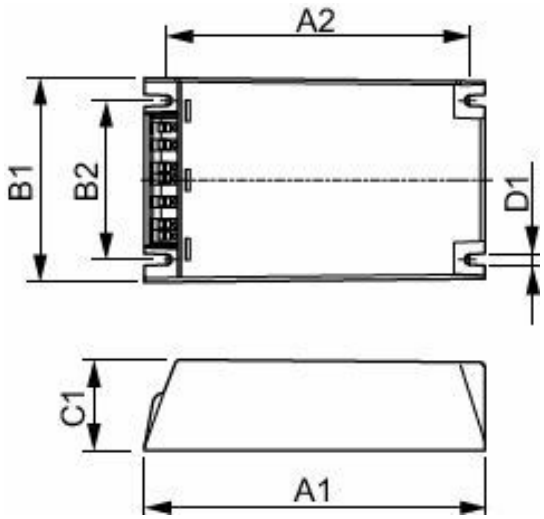

Product	D1	C1	A1	A2	B1	B2
HID-DV PROG Xt 100 CDO Q 208-277V	4.5 mm	40.0 mm	150.0 mm	133.6 mm	90.0 mm	70.0 mm
HID-DV PROG Xt 150 CDO Q 208-277V	4.5 mm	40.0 mm	150.0 mm	133.6 mm	90.0 mm	70.0 mm
HID-DV PROG Xt 50 CDO Q 208-277V	4.5 mm	40.0 mm	150.0 mm	133.6 mm	90.0 mm	70.0 mm
HID-DV PROG Xt 70 CDO Q 208-277V	4.5 mm	40.0 mm	150.0 mm	133.6 mm	90.0 mm	70.0 mm

Product details



HID-DV DALI Prog Xt 150 CDO Q



HID-DV DALI Prog Xt 50 & 70 CDO Q



HID-DV DALI Prog Xt 100 CDO Q

Operating and Electrical

Input Voltage	208-240-277 V
Line Frequency	50 to 60 Hz
Input Frequency	50 to 60 Hz

Mechanical and Housing

Housing	Q

Operating and Electrical

Order Code	Full Product Name	Number of Products on MCB (16A Type B) (Nom)
913700692966	HID-DV PROG Xt 50 CDO Q 208-277V	11
913700693066	HID-DV PROG Xt 70 CDO Q 208-277V	11
913700693166	HID-DV PROG Xt 100 CDO Q 208-277V	5
913700693266	HID-DV PROG Xt 150 CDO Q 208-277V	5

© 2026 Signify Holding. All rights reserved. The information provided herein is subject to change, without notice. Signify does not give any representation or warranty as to the accuracy or completeness of the information included herein and shall not be liable for any action in reliance thereon. The information presented in this document is not intended as any commercial offer and does not form part of any quotation or contract, unless otherwise agreed by Signify. Philips and the Philips Shield Emblem are registered trademarks of Koninklijke Philips N.V.