PHILIPS

StreetStar Gen2

BRP24

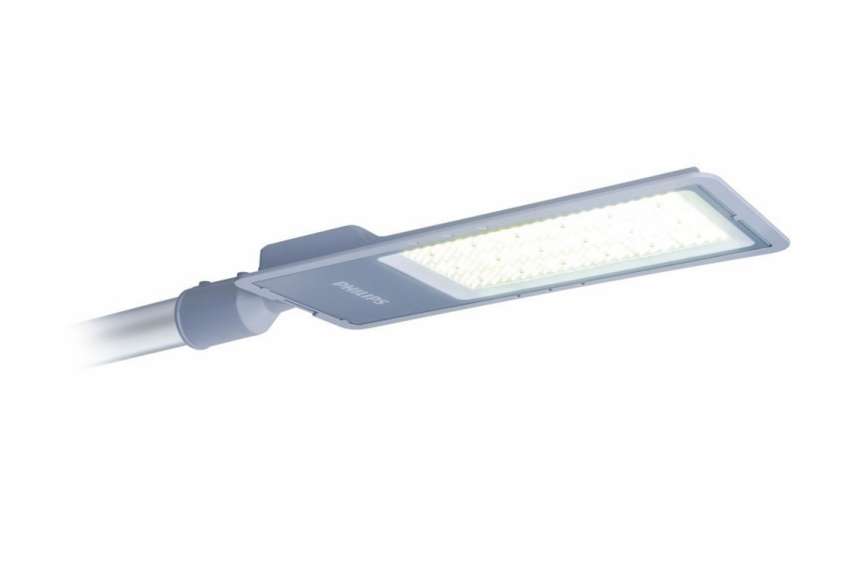

Great value for road lighting

StreetStar Gen2 brings great value for street lighting with its energy-efficient, cost-effective, slim but robust design. It's the perfect option for municipalities and businesses seeking a reliable and sustainable lighting solution. StreetStar Gen2 offers unparalleled value and performance.

Benefits

- Optimal energy savings: High efficacy for energy savings and sustainability
- Easy installation: Lightweight with adaptable spigot
- Robust and Reliable: Quality components combined with durable design
- Affordable: Enjoy the benefit of energy-saving NOW

Applications

- Residential and connecting roads
- Expressway
- Urban roads and parking lots
- Suburban roads and pathways

Features

- Energy efficient: 140lm/W for NW
- Easy and flexible mounting: adjustable side-entry and post-top with pre-wired cable
- Slim and robust design: die-cast aluminum structure
- Easy cleaning and maintenance: glass front cover
- Professional lighting design

Versions



Streetstar G2



StreetStar Gen2



StreetStar Gen2



StreetStar Gen2



Streetstar G2



StreetStar Gen2



Streetstar G2



Streetstar G2



Streetstar G2



StreetStar Gen2



StreetStar Gen2



Streetstar G2

Dimensional drawing

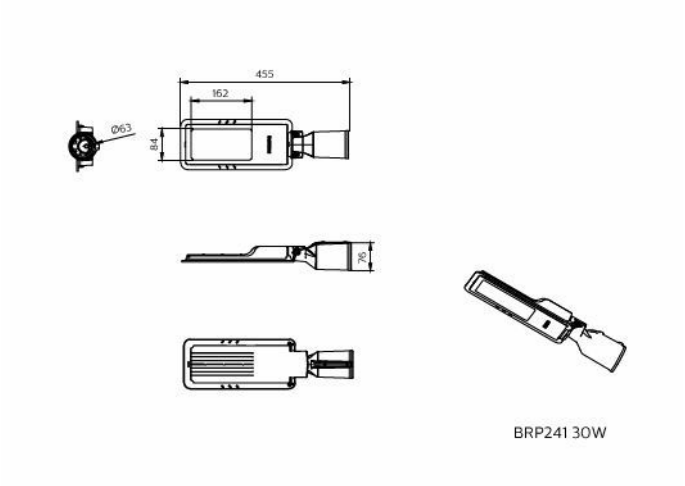

BRP241 LED40/WW 30W DM0 PSU

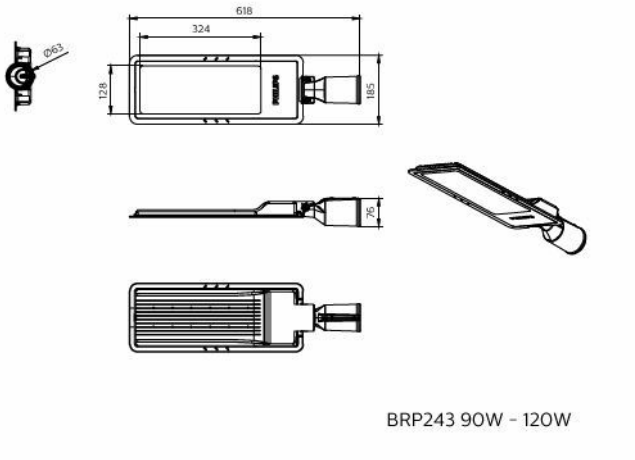

BRP244 LED168/NW 120W DM0 PSU

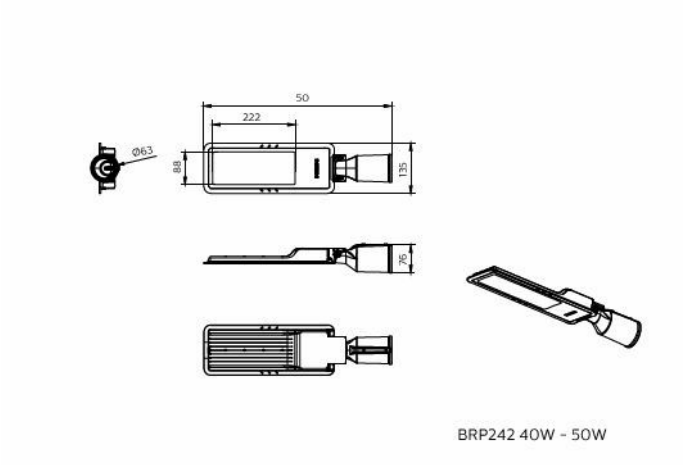

BRP242 LED70/NW 50W DM0 PSU GC

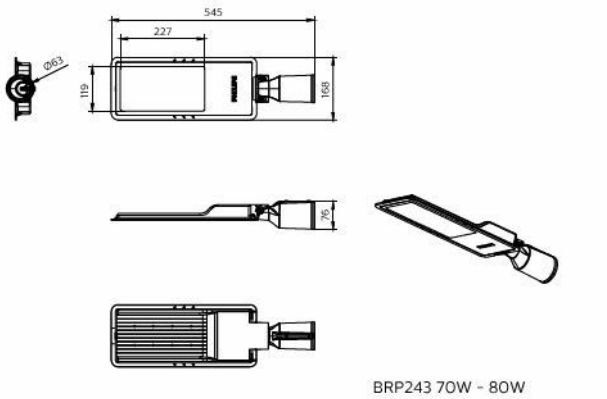

BRP243 LED112/NW 80W DM0 PSU ANZ

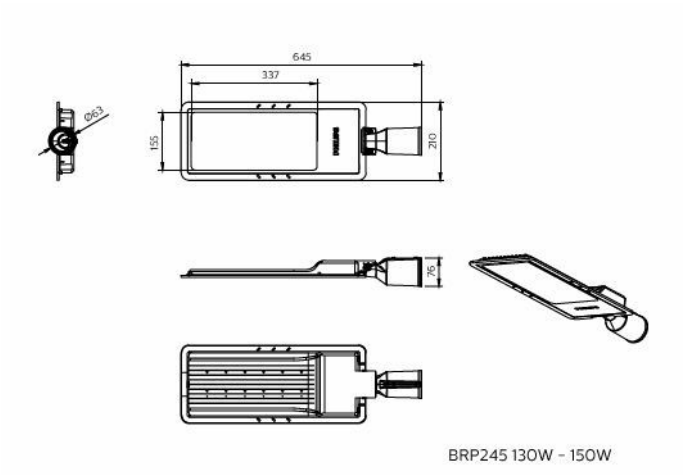

BRP245 LED202/WW 150W DM0 PSU GC

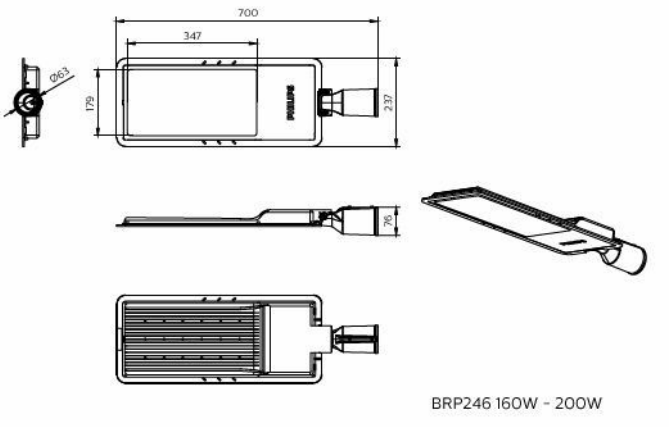

BRP246 LED270/WW 200W DM0 PSU GC

General Information

Gear	EB [Electronic]
Driver included	Yes

Light Technical

Color rendering index (CRI)	≥70

Controls and Dimming

Dimmable	Fixed
Maximum dim level	Not applicable

Mechanical and Housing

Ingress protection code	IP66 [Dust penetration-protected, jet-proof]
Mech. impact protection code	IK08 [6 J]
Optical cover type	Tempered glass

Approval and Application

Flammability mark	-
CE mark	Yes

Light Technical

Order Code	Full Product Name	Luminous Flux	Correlated Color Temperature (Nom)	Light source color
911401870087	BRP244 LED135/WW 100W DM0 PSU GC	13,500 lm	3000 K	730 warm white
911401870187	BRP244 LED162/WW 120W DM0 PSU GC	16,200 lm	3000 K	730 warm white
911401870987	BRP244 LED140/NW 100W DM0 PSU GC	14,000 lm	4000 K	740 neutral white
911401871087	BRP244 LED168/NW 120W DM0 PSU GC	16,800 lm	4000 K	740 neutral white
911401817188	BRP243 LED112/NW 80W DM0 PSU ANZ	11,200 lm	4000 K	740 neutral white
911401868087	BRP243 LED94/WW 70W DM0 PSU	9,400 lm	3000 K	730 warm white
911401868187	BRP243 LED108/WW 80W DM0 PSU	10,800 lm	3000 K	730 warm white
911401868987	BRP243 LED98/NW 70W DM0 PSU	9,800 lm	4000 K	740 neutral white
911401869087	BRP243 LED112/NW 80W DM0 PSU	11,200 lm	4000 K	740 neutral white
911401867987	BRP242 LED67/WW 50W DM0 PSU	6,700 lm	3000 K	730 warm white
911401868887	BRP242 LED70/NW 50W DM0 PSU	7,000 lm	4000 K	740 neutral white
911401817088	BRP241 LED42/NW 30W DM0 PSU ANZ	4,200 lm	4000 K	740 neutral white
911401867887	BRP241 LED40/WW 30W DM0 PSU	4,000 lm	3000 K	730 warm white
911401868787	BRP241 LED42/NW 30W DM0 PSU	4,200 lm	4000 K	740 neutral white
911401869787	BRP242 LED67/WW 50W DM0 PSU GC	6,700 lm	3000 K	730 warm white
911401870687	BRP242 LED70/NW 50W DM0 PSU GC	7,000 lm	4000 K	740 neutral white
911401868287	BRP244 LED135/WW 100W DM0 PSU	13,500 lm	3000 K	730 warm white

Order Code	Full Product Name	Luminous Flux	Correlated Color Temperature (Nom)	Light source color
911401868387	BRP244 LED162/WW 120W DM0 PSU	16,200 lm	3000 K	730 warm white
911401869187	BRP244 LED140/NW 100W DM0 PSU	14,000 lm	4000 K	740 neutral white
911401869287	BRP244 LED168/NW 120W DM0 PSU	16,800 lm	4000 K	740 neutral white
911401869687	BRP241 LED40/WW 30W DM0 PSU GC	4,000 lm	3000 K	730 warm white
911401870587	BRP241 LED42/NW 30W DM0 PSU GC	4,200 lm	4000 K	740 neutral white
911401869887	BRP243 LED94/WW 70W DM0 PSU GC	9,400 lm	3000 K	730 warm white
911401869987	BRP243 LED108/WW 80W DM0 PSU GC	10,800 lm	3000 K	730 warm white
911401870787	BRP243 LED98/NW 70W DM0 PSU GC	9,800 lm	4000 K	740 neutral white
911401870887	BRP243 LED112/NW 80W DM0 PSU GC	11,200 lm	4000 K	740 neutral white
911401870287	BRP245 LED202/WW 150W DM0 PSU GC	20,200 lm	3000 K	730 warm white
911401871187	BRP245 LED210/NW 150W DM0 PSU GC	21,000 lm	4000 K	740 neutral white
911401817388	BRP246 LED280/NW 200W DM0 PSU ANZ	28,000 lm	4000 K	740 neutral white
911401868587	BRP246 LED243/WW 180W DM0 PSU	24,300 lm	3000 K	730 warm white
911401868687	BRP246 LED270/WW 200W DM0 PSU	27,000 lm	3000 K	730 warm white
911401869487	BRP246 LED252/NW 180W DM0 PSU	25,200 lm	4000 K	740 neutral white
911401869587	BRP246 LED280/NW 200W DM0 PSU	28,000 lm	4000 K	740 neutral white
911401817288	BRP245 LED210/NW 150W DM0 PSU ANZ	21,000 lm	4000 K	740 neutral white
911401868487	BRP245 LED202/WW 150W DM0 PSU	20,200 lm	3000 K	730 warm white
911401869387	BRP245 LED210/NW 150W DM0 PSU	21,000 lm	4000 K	740 neutral white
911401870387	BRP246 LED243/WW 180W DM0 PSU GC	24,300 lm	3000 K	730 warm white
911401870487	BRP246 LED270/WW 200W DM0 PSU GC	27,000 lm	3000 K	730 warm white
911401871287	BRP246 LED252/NW 180W DM0 PSU GC	25,200 lm	4000 K	740 neutral white
911401871387	BRP246 LED280/NW 200W DM0 PSU GC	28,000 lm	4000 K	740 neutral white

Operating and Electrical

Order Code	Full Product Name	Power Consumption
911401870087	BRP244 LED135/WW 100W DM0 PSU GC	100 W
911401870187	BRP244 LED162/WW 120W DM0 PSU GC	120 W
911401870987	BRP244 LED140/NW 100W DM0 PSU GC	100 W
911401871087	BRP244 LED168/NW 120W DM0 PSU GC	120 W
911401817188	BRP243 LED112/NW 80W DM0 PSU ANZ	80 W
911401868087	BRP243 LED94/WW 70W DM0 PSU	70 W
911401868187	BRP243 LED108/WW 80W DM0 PSU	80 W
911401868987	BRP243 LED98/NW 70W DM0 PSU	70 W
911401869087	BRP243 LED112/NW 80W DM0 PSU	80 W
911401867987	BRP242 LED67/WW 50W DM0 PSU	50 W
911401868887	BRP242 LED70/NW 50W DM0 PSU	50 W
911401817088	BRP241 LED42/NW 30W DM0 PSU ANZ	30 W
911401867887	BRP241 LED40/WW 30W DM0 PSU	30 W
911401868787	BRP241 LED42/NW 30W DM0 PSU	30 W
911401869787	BRP242 LED67/WW 50W DM0 PSU GC	50 W

Order Code	Full Product Name	Power Consumption
911401870687	BRP242 LED70/NW 50W DM0 PSU GC	50 W
911401868287	BRP244 LED135/WW 100W DM0 PSU	100 W
911401868387	BRP244 LED162/WW 120W DM0 PSU	120 W
911401869187	BRP244 LED140/NW 100W DM0 PSU	100 W
911401869287	BRP244 LED168/NW 120W DM0 PSU	120 W
911401869687	BRP241 LED40/WW 30W DM0 PSU GC	30 W
911401870587	BRP241 LED42/NW 30W DM0 PSU GC	30 W
911401869887	BRP243 LED94/WW 70W DM0 PSU GC	70 W
911401869987	BRP243 LED108/WW 80W DM0 PSU GC	80 W
911401870787	BRP243 LED98/NW 70W DM0 PSU GC	70 W
911401870887	BRP243 LED112/NW 80W DM0 PSU GC	80 W
911401870287	BRP245 LED202/WW 150W DM0 PSU GC	150 W
911401871187	BRP245 LED210/NW 150W DM0 PSU GC	150 W
911401817388	BRP246 LED280/NW 200W DM0 PSU ANZ	200 W
911401868587	BRP246 LED243/WW 180W DM0 PSU	180 W
911401868687	BRP246 LED270/WW 200W DM0 PSU	200 W
911401869487	BRP246 LED252/NW 180W DM0 PSU	180 W
911401869587	BRP246 LED280/NW 200W DM0 PSU	200 W
911401817288	BRP245 LED210/NW 150W DM0 PSU ANZ	150 W
911401868487	BRP245 LED202/WW 150W DM0 PSU	150 W
911401869387	BRP245 LED210/NW 150W DM0 PSU	150 W
911401870387	BRP246 LED243/WW 180W DM0 PSU GC	180 W
911401870487	BRP246 LED270/WW 200W DM0 PSU GC	200 W
911401871287	BRP246 LED252/NW 180W DM0 PSU GC	180 W
911401871387	BRP246 LED280/NW 200W DM0 PSU GC	200 W

Mechanical and Housing

Order Code	Full Product Name	Housing Color
911401870087	BRP244 LED135/WW 100W DM0 PSU GC	RAL7040
911401870187	BRP244 LED162/WW 120W DM0 PSU GC	RAL7040
911401870987	BRP244 LED140/NW 100W DM0 PSU GC	RAL7040
911401871087	BRP244 LED168/NW 120W DM0 PSU GC	RAL7040
911401817188	BRP243 LED112/NW 80W DM0 PSU ANZ	Gray
911401868087	BRP243 LED94/WW 70W DM0 PSU	RAL7040
911401868187	BRP243 LED108/WW 80W DM0 PSU	RAL7040
911401868987	BRP243 LED98/NW 70W DM0 PSU	RAL7040
911401869087	BRP243 LED112/NW 80W DM0 PSU	RAL7040
911401867987	BRP242 LED67/WW 50W DM0 PSU	RAL7040
911401868887	BRP242 LED70/NW 50W DM0 PSU	RAL7040
911401817088	BRP241 LED42/NW 30W DM0 PSU ANZ	Gray
911401867887	BRP241 LED40/WW 30W DM0 PSU	RAL7040

Order Code	Full Product Name	Housing Color
911401868787	BRP241 LED42/NW 30W DM0 PSU	RAL7040
911401869787	BRP242 LED67/WW 50W DM0 PSU GC	RAL7040
911401870687	BRP242 LED70/NW 50W DM0 PSU GC	RAL7040
911401868287	BRP244 LED135/WW 100W DM0 PSU	RAL7040
911401868387	BRP244 LED162/WW 120W DM0 PSU	RAL7040
911401869187	BRP244 LED140/NW 100W DM0 PSU	RAL7040
911401869287	BRP244 LED168/NW 120W DM0 PSU	RAL7040
911401869687	BRP241 LED40/WW 30W DM0 PSU GC	RAL7040
911401870587	BRP241 LED42/NW 30W DM0 PSU GC	RAL7040
911401869887	BRP243 LED94/WW 70W DM0 PSU GC	RAL7040
911401869987	BRP243 LED108/WW 80W DM0 PSU GC	RAL7040
911401870787	BRP243 LED98/NW 70W DM0 PSU GC	RAL7040
911401870887	BRP243 LED112/NW 80W DM0 PSU GC	RAL7040
911401870287	BRP245 LED202/WW 150W DM0 PSU GC	RAL7040
911401871187	BRP245 LED210/NW 150W DM0 PSU GC	RAL7040
911401817388	BRP246 LED280/NW 200W DM0 PSU ANZ	Gray
911401868587	BRP246 LED243/WW 180W DM0 PSU	RAL7040
911401868687	BRP246 LED270/WW 200W DM0 PSU	RAL7040
911401869487	BRP246 LED252/NW 180W DM0 PSU	RAL7040
911401869587	BRP246 LED280/NW 200W DM0 PSU	RAL7040
911401817288	BRP245 LED210/NW 150W DM0 PSU ANZ	Gray
911401868487	BRP245 LED202/WW 150W DM0 PSU	RAL7040
911401869387	BRP245 LED210/NW 150W DM0 PSU	RAL7040
911401870387	BRP246 LED243/WW 180W DM0 PSU GC	RAL7040
911401870487	BRP246 LED270/WW 200W DM0 PSU GC	RAL7040
911401871287	BRP246 LED252/NW 180W DM0 PSU GC	RAL7040
911401871387	BRP246 LED280/NW 200W DM0 PSU GC	RAL7040

© 2026 Signify Holding. All rights reserved. The information provided herein is subject to change, without notice. Signify does not give any representation or warranty as to the accuracy or completeness of the information included herein and shall not be liable for any action in reliance thereon. The information presented in this document is not intended as any commercial offer and does not form part of any quotation or contract, unless otherwise agreed by Signify. Philips and the Philips Shield Emblem are registered trademarks of Koninklijke Philips N.V.