PHILIPS

PrimaVision Xtreme for SON

DPVSONXT



Xtreme drivers for the highest reliability

Highly reliable electronic drivers for SON lamps designed for saving energy via better light efficiency compared to magnetic drivers and for saving on maintenance costs thanks to a lifetime of up to 80.000 hours and the integrated lightning protection.

Benefits

- Up to 15% energy saving due to the high driver efficiency (92%) and better wattage control at overvoltage (when compared to magnetic ballasts)
- Minimizes maintenance cost due to the Xtreme lifetime of 80.000 hours and the integrated lightning protection
- Better light quality as the PrimaVision Xtreme gears enable perfect output uniformity across the lighting network and solve the flickering effect (created by magnetic ballasts)

Applications

- Residential lighting
- City beautification
- Road and highway lighting

Features

- Xtreme long lifetime of 80.000 hours with minimum 90% survival at a case temperature of 80 °C
- Xtreme lightning protection (10 kV)
- Xtreme protection against humidity and vibration
- Better lighting efficiency compared to magnetic ballasts
- Accurate lamp power stabilization of 95-97 % over wide mains voltage range of 180-300 V

Versions



GPPR IPVCPOXt PHL 0012

Dimensional drawing

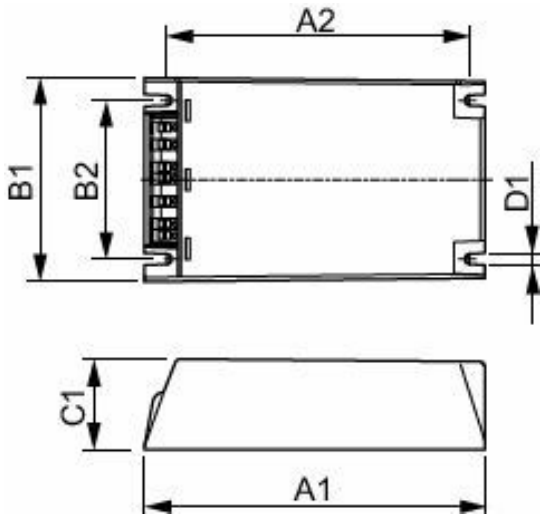

Product	D1	C1	A1	A2	B1	B2
PV Xt Q 100W SON	4.5 mm	40.0 mm	150.0 mm	133.6 mm	90.0 mm	70.0 mm
PV Xt Q 150W SON	4.5 mm	40.0 mm	150.0 mm	133.6 mm	90.0 mm	70.0 mm
PV Xt Q 70W SON	4.5 mm	40.0 mm	150.0 mm	133.6 mm	90.0 mm	70.0 mm

Operating and Electrical

Input Voltage	208-240-277 V
Line Frequency	50 to 60 Hz
Input Frequency	50 to 60 Hz

Operating and Electrical

Order Code	Full Product Name	Number of Products on MCB (16A Type B) (Nom)
913700690566	PV Xt Q 70W SON	11
913700690666	PV Xt Q 100W SON	5
913700690766	PV Xt Q 150W SON	5

Mechanical and Housing

Order Code	Full Product Name	Housing
913700690566	PV Xt Q 70W SON	Q
913700690666	PV Xt Q 100W SON	Q
913700690766	PV Xt Q 150W SON	-

© 2026 Signify Holding. All rights reserved. The information provided herein is subject to change, without notice. Signify does not give any representation or warranty as to the accuracy or completeness of the information included herein and shall not be liable for any action in reliance thereon. The information presented in this document is not intended as any commercial offer and does not form part of any quotation or contract, unless otherwise agreed by Signify. Philips and the Philips Shield Emblem are registered trademarks of Koninklijke Philips N.V.